GENERAL NOTES:

1. WATER CONSTRUCTION ON THIS SITE IS AUTHORIZED BY PERMITS ISSUED BY THE NORTH CAROLINA DEPARTMENT OF ENVIRONMENTAL QUALITY (NCDEQ) AND AUTHORIZED BY THE CITY OF HENDERSONVILLE. THE WORK IS SUBJECT TO INSPECTIONS AT ALL TIMES BY REPRESENTATIVES OF NCDEQ, THE CITY OF HENDERSONVILLE, THE OWNER OR THE ENGINEER. THE PERMITS REQUIRE CERTIFICATION OF COMPLETION OF THE WATER SYSTEMS BY THE ENGINEER AND THE APPLICANT PRIOR TO ISSUANCE OF FINAL OPERATION APPROVAL.
2. MATERIALS AND INSTALLATION FOR WATER CONSTRUCTION SHALL CONFORM TO THE LATEST VERSIONS OF CITY SPECIFICATION AND DETAILS AND AWWA STANDARDS AND REQUIREMENTS.
3. CONTRACTOR SHALL NOTIFY NC811 & APPROPRIATE UTILITIES AGENCIES PRIOR TO PERFORMING ANY WORK.
4. REGULAR WORKING HOURS SHALL BE FROM 7:00 AM TO 5:00 PM MONDAY THROUGH FRIDAY, EXCEPT IN CASES OF EMERGENCY OR OTHERWISE APPROVED IN WRITING BY THE CITY OR AUTHORIZED REPRESENTATIVES. THE CONTRACTOR SHALL ENSURE THE CONSTRUCTION SITE IS SAFE FOR ANY PERSONS WHO MAY BE ON SITE DURING NON-WORKING HOURS.
5. ALL PERSONS SHALL BE COURTEOUS AND RESPECTFUL TO THE PUBLIC. CURSING OUR FOUL LANGUAGE IS NOT PERMITTED AND WILL NOT BE TOLERATED.
6. THE CONTRACTOR IS RESPONSIBLE FOR PROVIDING TRAFFIC CONTROL ON ALL ROADWAYS DURING THE PROJECT. THE CONTRACTOR SHALL NOTIFY LOCAL EMERGENCY, SCHOOL AND OTHER NECESSARY AUTHORITIES PRIOR TO ANY STREET CLOSING OR TRAFFIC CHANGE.
7. THE CONTRACTOR AT HIS OWN EXPENSE SHALL KEEP THE CONSTRUCTION SITE AND ADJACENT PUBLIC AND PRIVATE ROADWAYS CLEAN DURING THE PROJECT. THE CONTRACTOR IS ALSO RESPONSIBLE FOR CONTROLLING DUST WITHIN THE PROJECT AREA.
8. THE CONTRACTOR IS RESPONSIBLE FOR ALL CONSTRUCTION IN ACCORDANCE WITH THE LINES, GRADES AND ELEVATIONS SHOWN ON THE PLANS OR AS GIVEN BY THE ENGINEER IN THE FIELD.
9. CONTRACTOR SHALL VERIFY THE EXACT LOCATION AND THE ELEVATION FOR ALL UTILITIES, DRAINAGE AND OTHER UNDERGROUND FACILITIES BOTH EXISTING AND PROPOSED, AND SHALL NOTIFY THE ENGINEER OF ANY DISCREPANCIES OR CONFLICTS PRIOR TO CONSTRUCTION.
10. CONTRACTOR SHALL PROTECT EXISTING UTILITIES DURING CONSTRUCTION. REPAIRS SHALL BE MADE IN ACCORDANCE WITH APPLICABLE STANDARDS OF APPROPRIATE AGENCIES AT THE CONTRACTOR'S EXPENSE.
11. DURING CONSTRUCTION THE CONTRACTOR SHALL MAINTAIN THE OPERATION OF EXISTING UTILITIES WITH THE LEAST AMOUNT OF SERVICE INTERRUPTION POSSIBLE IN COORDINATION WITH THE CITY OF HENDERSONVILLE. CONTINUOUS SERVICE, PUBLIC HEALTH AND SAFETY CONSIDERATIONS SHALL EXCEED ALL OTHERS AND CONTRACTOR'S SCHEDULE, PLANS AND WORK SHALL AT ALL TIMES BE SUBJECT TO ALTERATION AND REVISION IF NECESSARY FOR THESE CONSIDERATIONS.
12. THE CONTRACTOR SHALL BE RESPONSIBLE FOR THE TEMPORARY OR PERMANENT RELOCATION OF STRUCTURES AND UTILITIES, INCLUDING BUT NOT LIMITED TO POLES, SIGNS, FENCES, HYDRANTS, VALVES, PIPING, CONDUITS AND DRAINS THAT INTERFERE WITH THE POSITIONING OF THE WORK AS SHOWN ON THE DRAWINGS.
13. CONTRACTOR SHALL BE REQUIRED TO CONFORM AND COMPLY WITH ALL RESTRICTIONS AND EASEMENT CONDITIONS AND IS RESPONSIBLE FOR ALL RELATED INCIDENTAL COSTS INVOLVED.
14. EXISTING WATER SERVICES SHALL BE REPLACED TO THE EXISTING METER UNLESS OTHERWISE APPROVED IN WRITING BY THE CITY. SPLICING OF THE WATER SERVICE ON THE DOWNSTREAM SIDE OF THE METER IS NOT PERMITTED.
15. ALL DISTURBED AREAS, INCLUDING BUT NOT LIMITED TO ASPHALT, CONCRETE, DRIVEWAYS, ROADS, LANDSCAPING, SHALL BE REPAIRED TO EQUAL OR BETTER CONDITION THAN THE ORIGINAL SITE. GRASS AND LANDSCAPED AREAS FILL MATERIAL MUST BE REPLACED IN TRENCH TO GRADE AS SOON AS WATERLINE CONSTRUCTION ALLOWS. ADEQUATE SEEDING AND STRAW OR MULCH SHALL THEN BE APPLIED TO THE DISTURBED TRENCH AREA. ADDITIONAL FILL AND SITE RESTORATION MAY BE REQUIRED WITHIN THE WARRANTY PERIOD AT THE CITY'S DISCRETION.
16. CONTRACTOR SHALL PROVIDE EROSION CONTROL DEVICES TO CONTROL RUNOFF AS REQUIRED. THE CONTRACTOR IS RESPONSIBLE FOR ANY FINES THAT MAY BE LEVIED DUE TO RUNOFF FROM CONSTRUCTION.
17. IT IS THE SOLE RESPONSIBILITY OF THE CONTRACTOR TO FOLLOW ALL APPLICABLE FEDERAL, STATE AND LOCAL HEALTH AND SAFETY REGULATIONS PERTAINING TO CONSTRUCTION OPERATIONS.
18. ALL WATER MAINS SHALL HAVE 3 FEET MINIMUM COVER.
19. INSTALL FERROUS PIPING FOR BOTH WATER AND SEWER WITHIN 10 FT. OF A CROSSING IF:

19.1. SEWER LINE CROSSES OVER WATER, OR

19.2. VERTICAL CLEARANCE BETWEEN WATER AND SEWER IS LESS THAN 18 INCHES.

19.3. MAINTAIN 10 FEET HORIZONTAL SEPARATION BETWEEN SEWER AND WATER MAINS UNLESS LAID IN SEPARATE TRENCHES WITH THE BOTTOM OF THE WATER LINE AT LEAST 18 INCHES ABOVE THE TOP OF THE SEWER LINE OR USE FERROUS MATERIAL FOR BOTH WATER AND SEWER.

20. MAINTAIN 18 INCHES VERTICAL SEPARATION BETWEEN STORM DRAIN AND WATER, OR INSTALL FERROUS MATERIAL WATER LINE WITHIN 10 FEET EACH SIDE OF CROSSING.
21. TAPS GREATER THAN ONE-INCH IN DIAMETER IN EXISTING, ACTIVE WATER MAIN ARE TO BE PERFORMED BY THE CITY UNLESS OTHERWISE APPROVED IN WRITING BY THE CITY. TAPS IN NEW CONSTRUCTION ARE TO BE PERFORMED BY THE CONTRACTOR IN ACCORDANCE WITH CITY REQUIREMENTS.
22. ALL WATER METERS WILL BE SET BY CITY STAFF UNLESS THE CONTRACTOR IS GRANTED WRITTEN PERMISSION BY THE CITY.

22.1. THE CONTRACTOR WILL PROVIDE THE CITY NOTICE OF 10 WORKING DAYS MINIMUM PRIOR TO THE DATE OF METER INSTALLATION.

22.2. THE CONTRACTOR WILL PROVIDE A LICENSED PLUMBER DURING THE METER INSTALLATION TO VERIFY LINE SERVICES IN ALL MULTI-METER BOXES.

23. ALL PUBLIC WATER MAIN CONSTRUCTION SHALL BE PERFORMED BY A NORTH CAROLINA LICENSED UTILITY CONTRACTOR.
24. ALL WATER APPURTENANCES ARE TO BE MADE USING LEAD FREE MATERIALS. PIPE, FITTINGS, VALVES, HYDRANTS, PIPE CLAMPS, RESTRAINTS, FLANGES, CASTINGS, REBAR, HATCHES, INLETS, METER BOXES AND ALL OTHER CAST IRON COMPONENTS SHALL BE MANUFACTURED IN THE USA.
25. RESTRAINED JOINTS BY AN APPROVED PIPE MANUFACTURER ARE TO BE USED FOR ALL PUBLIC WATER LINES WHERE THRUST RESTRAINING IS REQUIRED IN ACCORDANCE WITH THE PLANS AND MANUFACTURER'S SPECIFICATION. CONCRETE THRUST BLOCKS ARE PERMITTED ONLY WHERE CONNECTIONS ARE MADE TO EXISTING WATER LINES OR WHERE THE USE OF MECHANICAL RESTRAINT IS NOT FEASIBLE.
26. ALL FIRE HYDRANTS, VAULTS, BACKFLOW PREVENTERS, HOT BOXES AND WATER METERS ARE TO BE INSTALLED ON RELATIVELY FLAT AREAS OUTSIDE OF PAVEMENT.
27. TAMPERING WITH OR ILLEGAL USE OF THE PUBLIC WATER SUPPLY WILL RESULT IN SUSPENSION OF WATER SERVICE, INCLUDING DOMESTIC AND COMMERCIAL, UNTIL FINAL APPROVAL BY THE CITY IS ISSUED. A PERSON FOUND TO BE USING WATER ILLEGALLY SHALL BE SUBJECT TO PENALTIES OR FINES, AS PRESCRIBED AND APPROVED BY CITY COUNCIL.

TESTING & INSPECTION:

1. NOTIFY THE CITY OF HENDERSONVILLE AND ENGINEER AT LEAST 5 WORKING DAYS BEFORE STARTING CONSTRUCTION OF WATER FACILITIES TO SCHEDULE A PRE-CONSTRUCTION CONFERENCE. THE ENGINEER SHALL PERIODICALLY INSPECT THE PROGRESS OF INSTALLATION AT A MINIMUM AND SHALL COMPLETE A FINAL WATER CERTIFICATION.
2. ALL CHANGES TO THE APPROVED CONSTRUCTION PLANS AND SUBMITTALS MUST BE APPROVED IN WRITING BY THE CITY PRIOR TO IMPLEMENTATION IN THE FIELD.
3. THE CONTRACTOR SHALL FURNISH SECURE AND PROVIDE ALL NECESSARY TESTING MATERIALS, EQUIPMENT, LABOR. THE CONTRACTOR SHALL COORDINATE TESTING, FLUSHING, DISINFECTION, AND BACTERIOLOGICAL SAMPLING WITH CITY INSPECTOR.
4. THE ENGINEER OR CONTRACTOR SHALL NOTIFY THE CITY CONSTRUCTION INSPECTORS 72 HOURS (MINIMUM) PRIOR TO ANY WATER MAIN OR TESTING OPERATIONS. AT A MINIMUM CITY STAFF SHALL BE NOTIFIED PRIOR TO TAPS, TESTING, FLUSHING, DISINFECTION, AND SAMPLING.
5. PRESSURE TEST WATER MAINS TO 200 PSI MIN. FOR A MINIMUM OF TWO HOURS IN ACCORDANCE WITH CITY REQUIREMENTS AND AWWA C600.
6. DISINFECT WATER LINES AND PROVIDE ACCEPTABLE BACTERIOLOGICAL TEST FROM A CERTIFIED TESTING LABORATORY IN ACCORDANCE WITH CITY REQUIREMENTS AND AWWA C651. THE CONTRACTOR MAY ELECT TO USE THE CITY'S CERTIFIED TESTING LABORATORY.
7. PRIVATELY OWNED FIRE SYSTEMS SHALL BE APPROVED BY THE APPROPRIATE LOCAL PERMITTING AUTHORITY. THE CITY ENGINEERING OR WATER AND SEWER DEPARTMENTS ARE NOT RESPONSIBLE FOR ENSURING COMPLIANCE WITH APPROPRIATE FIRE PROTECTION REGULATIONS. THE CITY DOES NOT PROVIDE ANY GUARANTEE OF ITS WATER SYSTEM'S CAPABILITY TO DELIVER WATER FLOW AND RESIDUAL PRESSURE THE FIRE PERMITTING AUTHORITY MAY REQUIRE.
8. ALL BACKFLOW PREVENTION ASSEMBLIES SHALL BE USC APPROVED AND REVIEWED BY THE CITY'S. PROTECTION OF THE PUBLIC WATER DISTRIBUTION SYSTEM SHALL BE ASSURED BY INSPECTION OF THE INSTALLATION AND TESTING OF BACKFLOW PREVENTION DEVICES IN ACCORDANCE WITH APPROPRIATE LOCAL, STATE, AND FEDERAL REGULATIONS.
9. CONSTRUCTION WATER SOURCING MUST BE APPROVED IN WRITING BY THE CITY. CONSTRUCTION WATER CONNECTIONS SHALL BE PAIRED WITH AN IRRIGATION METER AND APPROVED BACKFLOW PREVENTION ASSEMBLY. THIS ASSEMBLY INSTALLATION MUST BE TESTED BY A LICENSED PLUMBER AND TEST RESULTS SUBMITTED TO THE CITY BEFORE USE OF CONSTRUCTION WATER.
10. SECURE FINAL WRITTEN ACCEPTANCE FROM THE CITY OF HENDERSONVILLE PRIOR TO ACTIVATION OF THE SYSTEM. WATER SERVICE WILL NOT BE PROVIDED UNTIL WRITTEN ACCEPTANCE OF THE SYSTEM IS ISSUED BY THE CITY.
11. THE ENGINEER SHALL SUPPLY THE CITY WITH FINAL AS-BUILT DRAWINGS AND COMPLETE ALL PROJECT CLOSE OUT REQUIREMENTS.

DISCLAIMER:

THE STANDARD WATER DETAILS ARE FOR THE SOLE USE OF PROJECTS DIRECTLY FOR, OR THOSE PROJECTS IN WHICH OWNERSHIP WILL BE TRANSFERRED TO THE CITY OF HENDERSONVILLE. THESE TYPICALS ARE INTENDED TO SHOW THE CITY OF HENDERSONVILLE'S EXPECTATIONS FOR THE GENERAL LAYOUT, ARRANGEMENT, AND THE QUALITY OF EQUIPMENT AND MATERIALS FOR WATER DISTRIBUTION SYSTEM ITEMS AND THEIR RELATED APPURTENANCES. IT REMAINS THE SOLE RESPONSIBILITY OF THE ENGINEER IN RESPONSIBLE CHARGE (ERC) OF EACH APPLICATION TO DETERMINE, DESIGN TO, AND CERTIFY TO THE DESIGN PARAMETERS FOR EACH INSTALLATION. THE ERC MUST ALSO ENSURE THE DESIGN COMPLIES WITH THE MINIMUM DESIGN CRITERIA OF NC DIVISION OF ENVIRONMENTAL QUALITY AND ALL LOCAL AND STATE LAWS AND REGULATIONS.

DATE: 03/14/2019 WD DWG. NO. 1

SCALE: NOT TO SCALE

City of Hendersonville Engineering Department
305 Williams Street
Hendersonville, NC 28792
(828) 697-3000 (office)

www.cityofhendersonville.org

8/2/2019 9:40:20 AM, mpomraning

WATER DETAILS

GENERAL NOTES

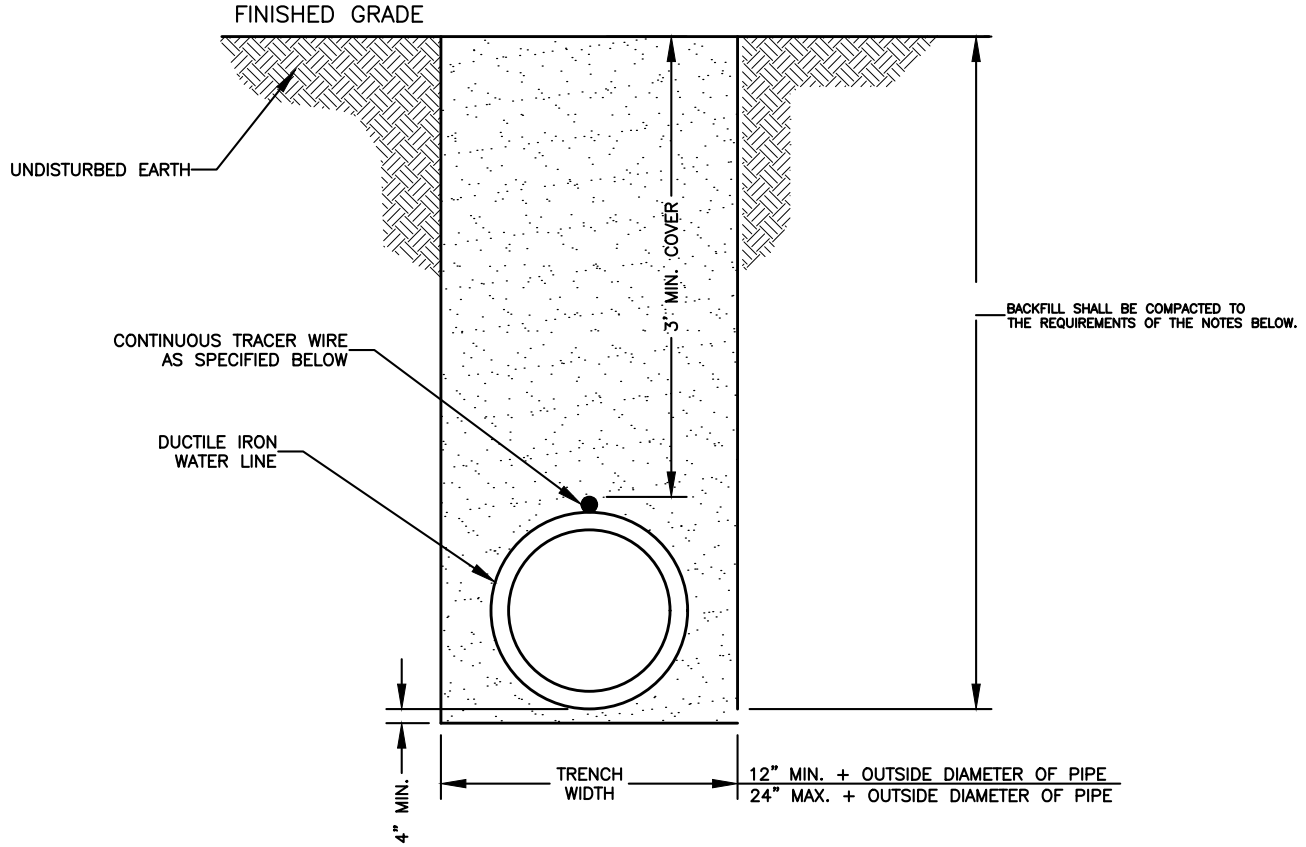

NOTES:

1. TRENCHES EXCAVATED OUTSIDE EXISTING ROAD AND RAILWAY RIGHTS–OF–WAY SHALL BE BE BACKFILLED WITH COMMON BACKFILL MATERIAL CONSISTING OF EXCAVATED MATERIALS EXCEPT HIGHLY ORGANIC SILTS AND CLAYS AND TAMPED THOROUGHLY. FILL SHALL BE DEPOSITED IN SUCCESSIVE, UNIFORM, APPROXIMATELY HORIZONTAL LAYERS. MATERIAL SHALL BE FREE OF ROOTS, STONES, AND DEBRIS. ALL MATERIAL SHALL HAVE AN IN–PLACE DENSITY OF AT LEAST 85% OF MAXIMUM DRY DENSITY (STANDARD PROCTOR) OR AS APPROVED BY THE ENGINEER. COMMON BACKFILL SHALL NOT CONTAIN STONE BLOCKS, BROKEN CONCRETE, MASONRY RUBBLE, OR OTHER SIMILAR MATERIALS. IT SHALL HAVE PHYSICAL PROPERTIES SUCH THAT IT CAN BE READILY SPREAD AND COMPACTED DURING FILLING. SNOW, ICE, AND FROZEN SOIL WILL NOT BE PERMITTED.

   WHERE EXCAVATED MATERIAL, AFTER REMOVAL OF ROCKS, STUMPS, PLANT MATERIAL, AND OTHER EXTRANEOUS MATERIAL AND PROPER DEWATERING, DRYING, PROTECTION, AND STORAGE OF THE EXCAVATION BY THE CONTRACTOR, CANNOT BE PREPARED TO MEET THE REQUIREMENTS FOR COMMON BACKFILL, DUE TO THE NATURE OF THE MATERIAL (E.G., EXCESSIVE ROCK, MUCK, ORGANICS, CLAY, SILT, OR OTHER MATERIAL), AND AS DETERMINED BY THE ENGINEER, THE UNACCEPTABLE EXCAVATION SHALL BE REMOVED FROM THE SITE AND DISPOSED OF BY THE CONTRACTOR AND REPLACED BY IMPORTED BACKFILL MEETING THE REQUIREMENTS OF STRUCTURAL BACKFILL. IMPORTED STRUCTURAL BACKFILL SHALL BE FREE OF ORGANICS, ROOTS OR OTHER DELETERIOUS MATERIALS AND SHALL NOT CONTAIN MORE THAN FIVE PERCENT (BY WEIGHT) ORGANIC MATERIAL, HAVE A PLASTICITY INDEX (PI) GREATER THAN 25, OR HAVE A MAXIMUM DRY DENSITY LESS THAN 90 POUNDS PER CUBIC FOOT. IMPORTED STRUCTURAL FILL SHOULD CONSIST OF MATERIAL CLASSIFIED AS ML, CL, SC, OR SM, OR BETTER PER ASTM D–2487 AND BE CAPABLE OF BEING COMPACTED TO 85% STANDARD PROCTOR.

2. THE WATER LINE SHALL HAVE A MINIMUM OF 3' OF COVER AT FINISHED GRADE.

   TRACER WIRE WILL BE A 19 GAUGE, TIN COATED, COPPER CONDUCTOR WITH POLYETHYLENE INSULATION. CORE MATERIAL COMPRISED OF HIGH–TENACITY, WOVEN POLYESTER WITH WATER BLOCKING YARNS ENCAPSULATED IN 30 MIL. BLUE HDPE JACKET PROVIDING CORROSION RESISTANCE, FLEXIBILITY, IMPACT STRENGTH AND 1800 LBS. TENSILE STRENGTH. TRACER WIRE WILL NOT CONDUCT AN ELECTRICAL CURRENT WHEN STRUCK BY LIGHTNING AND IS DESIGNED FOR DIRECT BURY AND DIRECTIONAL BORING APPLICATIONS. WHEN SPLICES AND LATERAL CONNECTIONS ARE MADE, ONLY GEL FILLED CONNECTORS DESIGNED FOR WIRE WITH WOVEN POLYESTER FIBER CORE ARE TO BE USED. TRACER WIRE AND CONNECTORS SHALL BE TRACE–SAFE® WATER BLOCKING TRACER WIRE AND RELATED CONNECTORS, MANUFACTURED BY NEPTCO, INC., OR EQUIVALENT APPROVED BY ENGINEER, AND PRODUCED IN THE UNITED STATES OF AMERICA.

   TRACER WIRE SHALL BE EXTENDED ALONG ALL WATER LINES, FITTINGS, VALVES, SERVICES, AND HYDRANTS. LOCATING CLIPS SHALL BE PROVIDED AT ALL VALVES, HYDRANT VALVES AND METER BOXES. THE CONTRACTOR SHALL DUCT TAPE TRACER WIRE ON CROWN OF WATER LINE EVERY FIVE FEET.

DATE: 01/12/2019 WD DWG. NO. 2

SCALE: NOT TO SCALE

City of Hendersonville Engineering Department
305 Williams Street
Hendersonville, NC 28792
(828) 697-3000 (office)

www.cityofhendersonville.org

8/2/2019 9:40:21 AM, mpomraning

WATER TRENCH CONSTRUCTION

OUTSIDE PAVEMENT

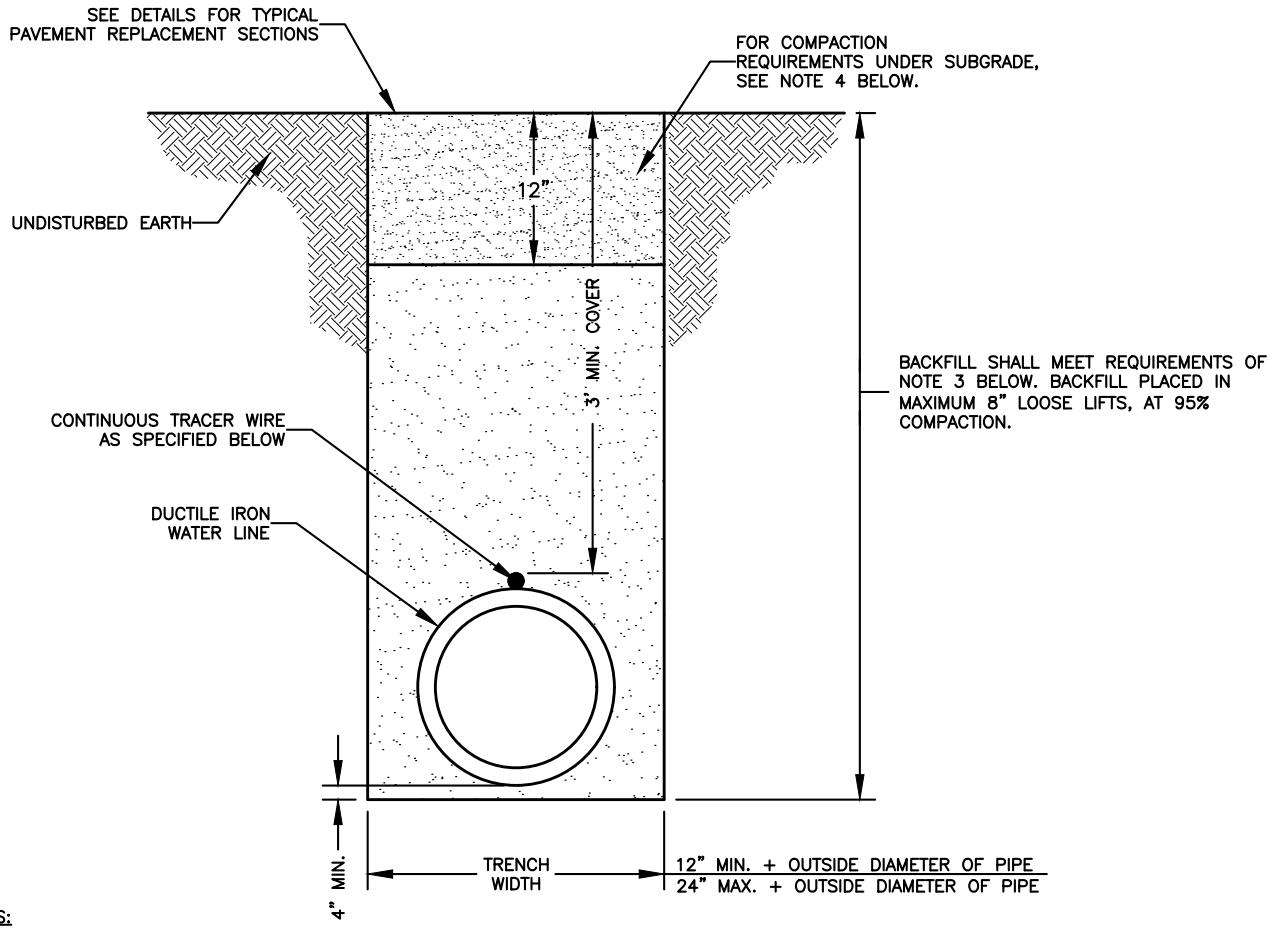

NOTES:

1. THIS TRENCH BACKFILL DETAIL APPLIES TO AREAS UNDER PAVEMENT, CURB, GUTTER, SIDEWALK OR AREAS WHERE THE TRENCH IS WITHIN FIVE (5) FEET OF THE EDGE OF PAVEMENT.

2. COMPACTION OF THE BACKFILL SHALL BE ACHIEVED THROUGH THE USE OF AN APPROVED VIBRATORY PLATE TAMPER OR ROLLER. THE CONTRACTOR IS RESPONSIBLE FOR MEETING ALL COMPACTION REQUIREMENTS.

3. COMPACTION TESTING OF THE BACKFILL SHALL BE PROVIDED, DIRECTED AND COORDINATED BY THE OWNER. INTERVALS OF TESTING SHALL BE AT THE TOTAL DISCRETION OF THE OWNER AND MAY BE CHANGED AT ANY TIME.

   IF A TEST DOES NOT PASS, THE CONTRACTOR SHALL REMOVE THE DEFECTIVE BACKFILL, REDO THE WORK AND THE AREA WILL BE RETESTED. THE CONTRACTOR SHALL BE AWARE OF THE LEVEL OF COMPACTION REQUIRED.

   IF THE WORK IS SUSPECT TO BE DEFECTIVE BY THE OWNER, THE WORK SHALL BE RETESTED.

   THE WATER CONTENT OF THE BACKFILL MATERIAL SHALL ALSO BE TESTED AND RECORDED FOR EACH TEST COMPLETED. THE CONTRACTOR WILL BE ALLOWED TO ADD WATER TO THE BACKFILL MATERIAL IN ORDER TO OBTAIN THE OPTIMUM WATER CONTENT. HOWEVER, THE CONTRACTOR WILL NOT BE ALLOWED TO UTILIZE THE ADDITION OF WATER AS A MEANS OF COMPACTION. FURTHERMORE, SHOULD THE BACKFILL MATERIAL BE FOUND TO HAVE WATER CONTENT RATIOS WHICH IN THE OPINION OF THE ENGINEER OR THE OWNER PREVENTS THE APPROPRIATE COMPACTION OF THE TRENCH, THE CONTRACTOR SHALL REMOVE ALL DEFECTIVE MATERIAL AND UNDERTAKE THE NECESSARY CORRECTIVE WORK.

4. THE TOP TWELVE INCHES OF THE FINAL BACKFILL SHALL BE COMPACTED TO 98% STANDARD PROCTOR,

5. THE WATER LINE SHALL HAVE A MINIMUM OF 3' OF COVER AT FINISHED GRADE.

6. TRACER WIRE WILL BE A 19 GAUGE, TIN COATED, COPPER CONDUCTOR WITH POLYETHYLENE INSULATION. CORE MATERIAL COMPRISED OF HIGH–TENACITY, WOVEN POLYESTER WITH WATER BLOCKING YARNS ENCAPSULATED IN 30 MIL. BLUE HDPE JACKET PROVIDING CORROSION RESISTANCE, FLEXIBILITY, IMPACT STRENGTH AND 1800 LBS. TENSILE STRENGTH. TRACER WIRE WILL NOT CONDUCT AN ELECTRICAL CURRENT WHEN STRUCK BY LIGHTNING AND IS DESIGNED FOR DIRECT BURY AND DIRECTIONAL BORING APPLICATIONS. WHEN SPLICES AND LATERAL CONNECTIONS ARE MADE, ONLY GEL FILLED CONNECTORS DESIGNED FOR WIRE WITH WOVEN POLYESTER FIBER CORE ARE TO BE USED. TRACER WIRE AND CONNECTORS SHALL BE TRACE–SAFE® WATER BLOCKING TRACER WIRE AND RELATED CONNECTORS, MANUFACTURED BY NEPTCO, INC., OR EQUIVALENT APPROVED BY ENGINEER, AND PRODUCED IN THE UNITED STATES OF AMERICA.

   TRACER WIRE SHALL BE EXTENDED ALONG ALL WATER LINES, FITTINGS, VALVES, SERVICES, AND HYDRANTS. LOCATING CLIPS SHALL BE PROVIDED AT ALL VALVES, HYDRANT VALVES AND METER BOXES. THE CONTRACTOR SHALL DUCT TAPE TRACER WIRE ON CROWN OF WATER LINE EVERY FIVE FEET.

DATE: 06/10/2019 WD DWG. NO. 3

SCALE: NOT TO SCALE

City of Hendersonville Engineering Department
305 Williams Street
Hendersonville, NC 28792
(828) 697-3000 (office)

www.cityofhendersonville.org

8/2/2019 9:40:22 AM, mpomraning

WATER TRENCH CONSTRUCTION

UNDER PAVEMENT

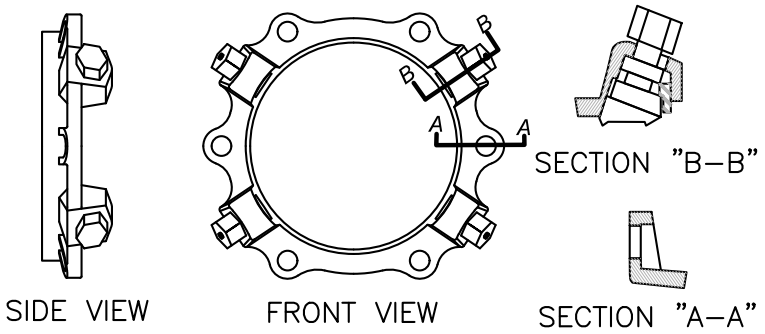

IRON RETAINING GLAND M.J. RESTRAINT			
NOMINAL PIPE SIZE	WEDGES QUANTITY	BOLTS QUANTITY	PRESS RATING
6"	3	6	350
8"	4	6	350
12"	8	8	350

8" SIZE SHOWN 6" & 12" SIMILAR IRON RETAINING GLAND M.J. RESTRAINT

LR (MIN. LENGTH OF RESTRAINT EACH DIRECTION OF THRUST IN LINEAR FEET)
Based on 200 psig pressure, Safety Factor of 2.0:1, BARE DI PIPE AND ML Soil, 3.5' cover
Chart does not apply to pipes wrapped in polyethylene wrap

PIPE SIZE	VALVES DEAD ENDS TEES	90° ELBOWS	45° ELBOW & CROSSES	22–1/2° ELBOWS	REDUCER	
6"	55'	31'	13'	7'	8"X2"	67'
8"	72'	40'	17'	8'	8"X6"	30'
12"	102'	57'	24'	12'	12"X8"	54'

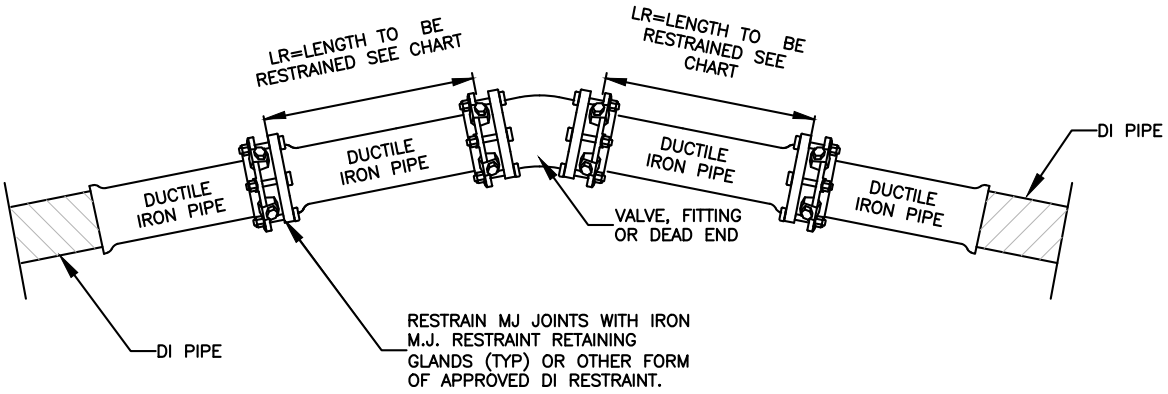

DATE: 01/12/2019 WD DWG. NO. 4-1

SCALE: NOT TO SCALE

City of Hendersonville Engineering Department
305 Williams Street
Hendersonville, NC 28792
(828) 697-3000 (office)

www.cityofhendersonville.org

8/2/2019 9:40:23 AM, mpomraning

DUCTILE IRON PIPE RESTRAINT DETAIL

SHEET 1 OF 2

THE CITY OF HENDERSONVILLE · N.C. 1847

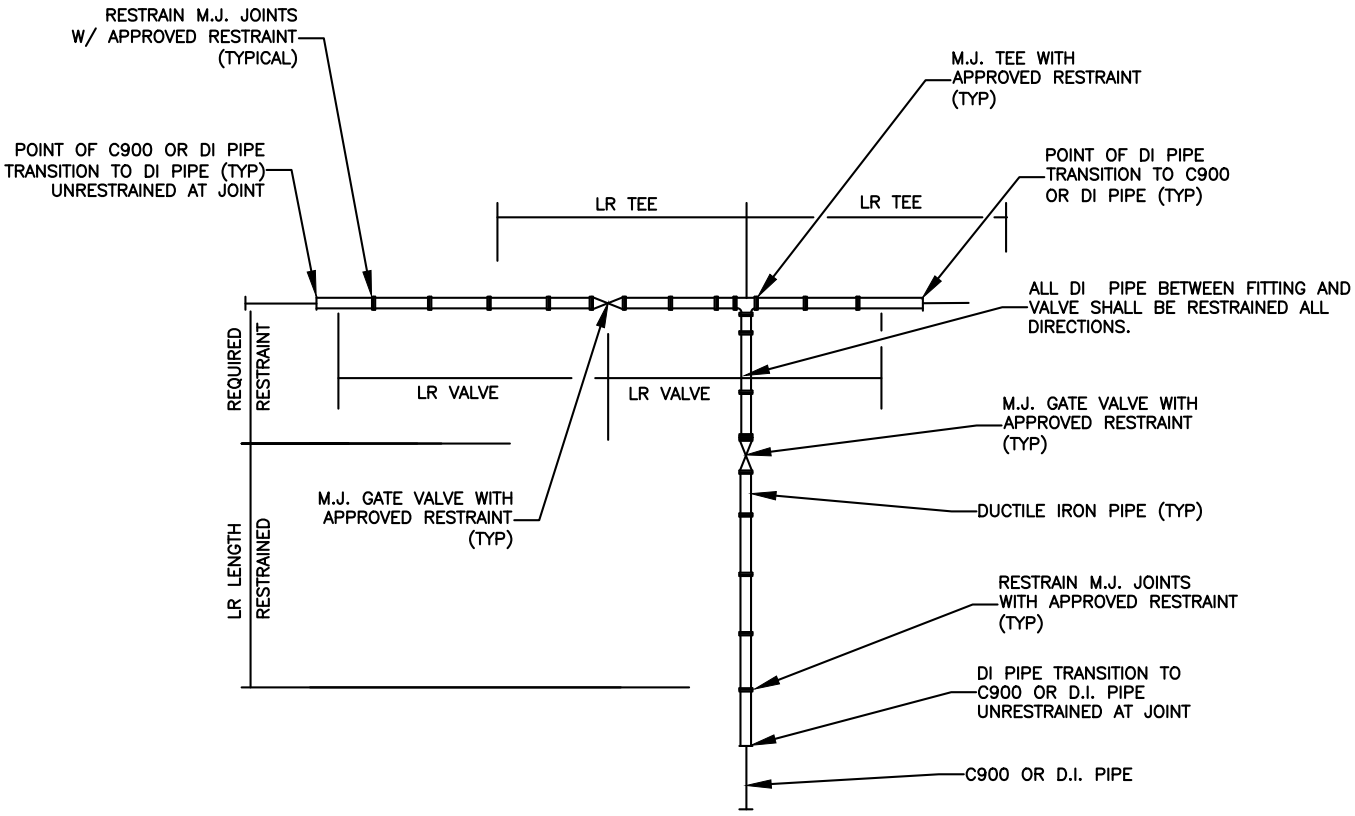

RESTRAINED JOINT DETAIL FOR TYPICAL TEE INTERSECTION 4 WAY INTERSECTION SIMILARLY RESTRAINED

NOTES:

1. THRUST RESTRAINT SHALL BE INSTALLED ON DUCTILE IRON WATER DISTRIBUTION LINES 6" THRU 12" DIAMETER IN THE MANNER SHOWN.
2. IRON RETAINING GLAND M.J. RESTRAINT OR OTHER FORMS OF IRON RESTRAINT SHALL NOT BE USED ON PVC PIPE.
3. PIPE GREATER THAN 12 INCH DIAMETER SHALL REQUIRE RESTRAINED JOINT PIPE FOR THE PROPER LENGTH.
4. COMPACT FITTINGS ARE ACCEPTABLE FOR USE WITH IRON RETAINING GLAND M.J. RESTRAINT AND OTHER FORMS OF DI RESTRAINT.
5. THE MINIMUM LENGTH OF RESTRAINT INDICATED SHALL REQUIRE ALL JOINTS WITHIN THE LR DISTANCE TO BE RESTRAINED.
6. RESTRAINT SYSTEM SHALL BE INSPECTED AND APPROVED PRIOR TO BACKFILLING.
7. RESTRAINT SYSTEMS MAY VARY BASED UPON THE ENGINEERS' DESIGN AS SHOWN ON THE PLAN AND PROFILE SHEETS.
8. GRIPPER RING AND FIELD LOK GASKETS ARE AN ACCEPTABLE METHOD OF RESTRAINT ON DUCTILE IRON PIPE ONLY.
9. TRACER WIRE NOT SHOWN FOR CLARITY. WIRE SHALL BE INSTALLED PER OTHER DETAILS.
10. M.J. SHALL BE PRODUCED IN USA.

DATE: 01/12/2019 WD DWG. NO. 4-2

SCALE: NOT TO SCALE

City of Hendersonville Engineering Department
305 Williams Street
Hendersonville, NC 28792
(828) 697-3000 (office)

www.cityofhendersonville.org

8/2/2019 9:40:25 AM, mpomraning

DUCTILE IRON PIPE RESTRAINT DETAIL

SHEET 2 OF 2

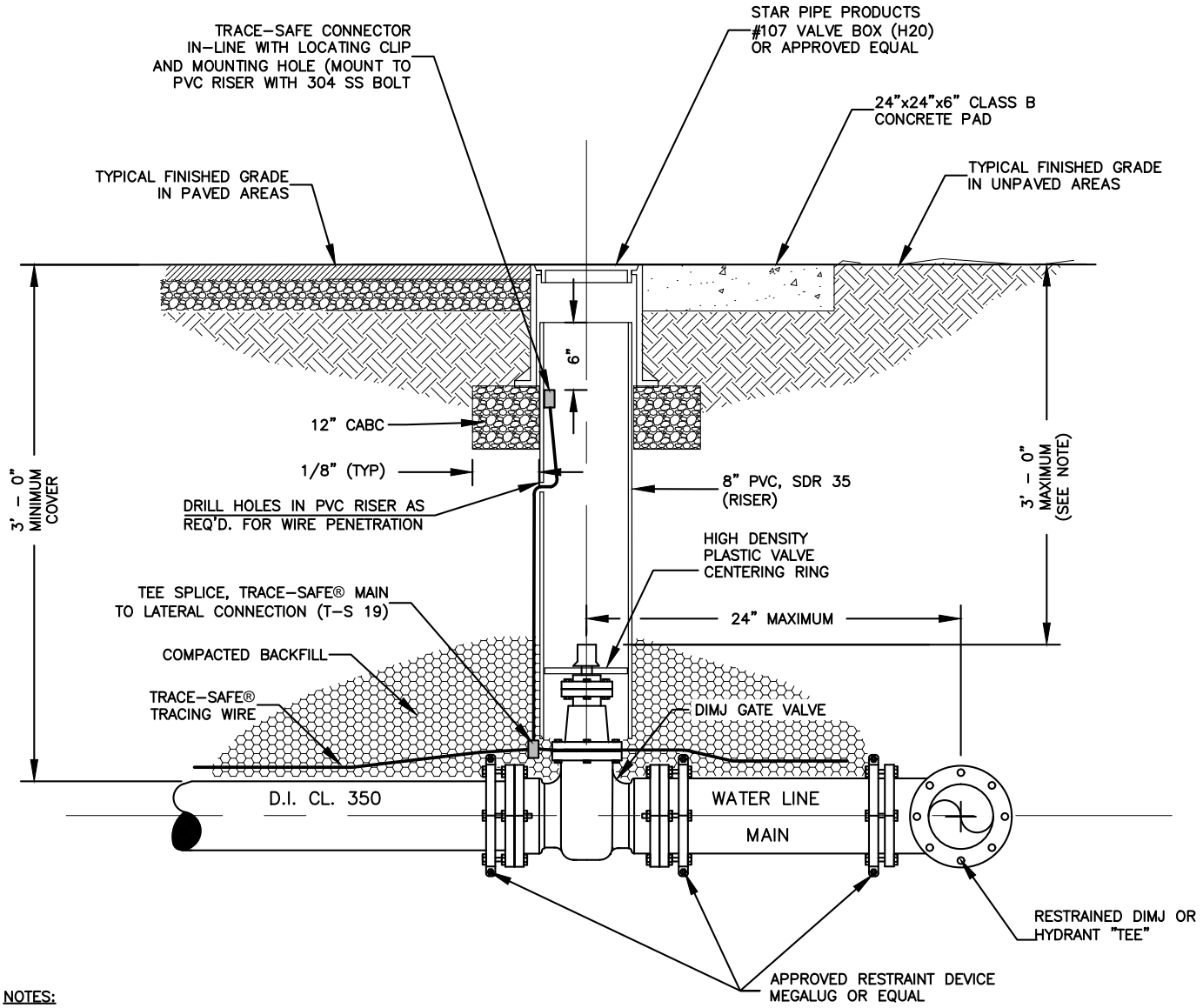

NOTES:

1. TOP OF COVER SHALL BE STAMPED "WATER"
2. VALVE PAD REQUIREMENTS SHALL NOT BE APPLICABLE FOR PAVED SURFACES.
3. PAVEMENT REPAIR SHALL MATCH EXISTING ROAD PAVING SECTION. SEE NCDOT ASPHALT REPAIR DETAIL # 654.01.
4. WHEN OPERATING NUT DEPTH EXCEEDS 3'-0" BELOW FINISHED GRADE, PROVIDE EXTENSION STEM WITH STANDARD 2" SQUARE OPERATING NUT. TOP OF NUT SHALL BE WITHIN 5" TO 9" OF FINISHED GRADE.
5. TRACER WIRE WILL BE A 19 GAUGE, TIN COATED, COPPER CONDUCTOR WITH POLYETHYLENE INSULATION. CORE MATERIAL COMPRISED OF HIGH-TENACITY, WOVEN POLYESTER WITH WATER BLOCKING YARNS ENCAPSULATED IN 30 MIL. BLUE HDPE JACKET PROVIDING CORROSION RESISTANCE, FLEXIBILITY, IMPACT STRENGTH AND 1800 LBS. TENSILE STRENGTH. TRACER WIRE WILL NOT CONDUCT AN ELECTRICAL CURRENT WHEN STRUCK BY LIGHTNING AND IS DESIGNED FOR DIRECT BURY AND DIRECTIONAL BORING APPLICATIONS. WHEN SPLICES AND LATERAL CONNECTIONS ARE MADE, ONLY GEL FILLED CONNECTORS DESIGNED FOR WIRE WITH WOVEN POLYESTER FIBER CORE ARE TO BE USED. TRACER WIRE AND CONNECTORS SHALL BE TRACE-SAFE® WATER BLOCKING TRACER WIRE AND RELATED CONNECTORS, MANUFACTURED BY NEPTCO, INC., OR APPROVED EQUIVALENT, AND PRODUCED IN THE UNITED STATES OF AMERICA.

DATE: 01/12/2019 WD DWG. NO. 5

SCALE: NOT TO SCALE

City of Hendersonville Engineering Department
305 Williams Street
Hendersonville, NC 28792
(828) 697-3000 (office)

www.cityofhendersonville.org

8/2/2019 9:40:26 AM, mpomraning

VALVE INSTALLATION DETAIL

THE CITY OF HENDERSONVILLE · N.C. 1847

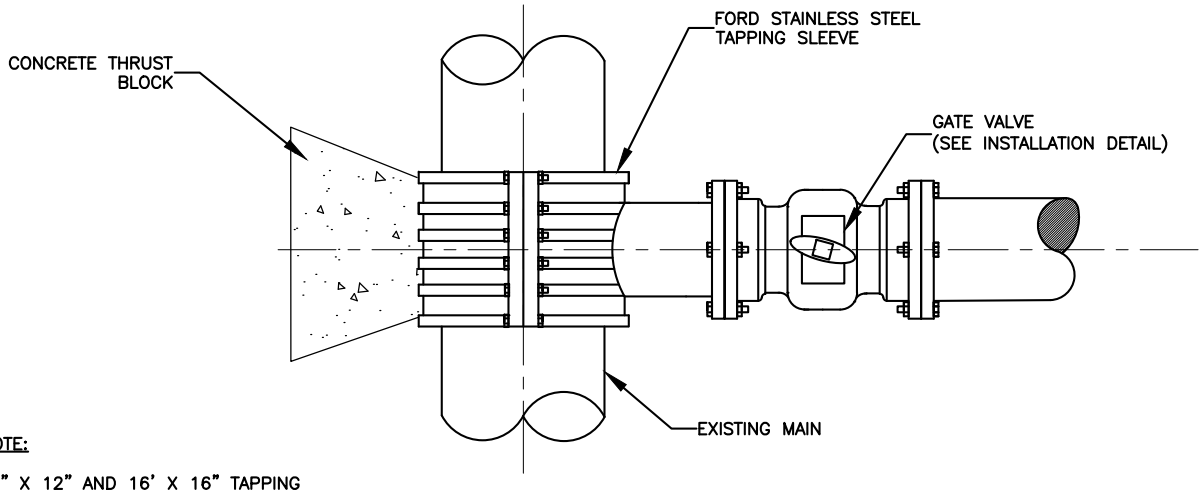

NOTE:

12" X 12" AND 16' X 16" TAPPING SLEEVES ARE NOT ALLOWED.

PLAN

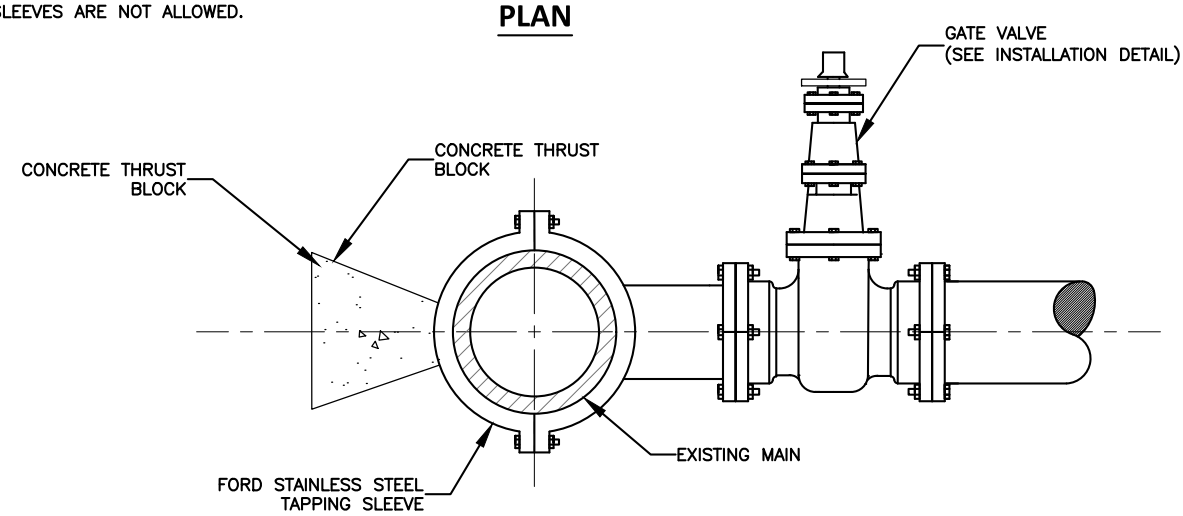

ELEVATION

NOTE:

12" X 12" AND 16' X 16" TAPPING SLEEVES ARE NOT ALLOWED.

TABLE A–1

TBD

NOTE:

1. CONCRETE SHALL BE 3000 PSI.
2. CONCRETE SHALL NOT CONTACT BOLTS OR ENDS OF MECHANICAL JOINT FITTINGS BY THE INSTALLATION OF POLYETHYLENE FILM PLACED BETWEEN THE FITTINGS AND POURED CONCRETE.
3. SEE TABLE A–1 FOR AREA OF CONCRETE REQUIRED FOR MAIN SIZED 6–INCH THROUGH 16–INCH.

DATE: 01/12/2019 WD DWG. NO. 6

SCALE: NOT TO SCALE

City of Hendersonville Engineering Department
305 Williams Street
Hendersonville, NC 28792
(828) 697-3000 (office)

www.cityofhendersonville.org

8/2/2019 9:40:28 AM, mpomraning

STANDARD TAPPING SLEEVE AND VALVE ASSEMBLY

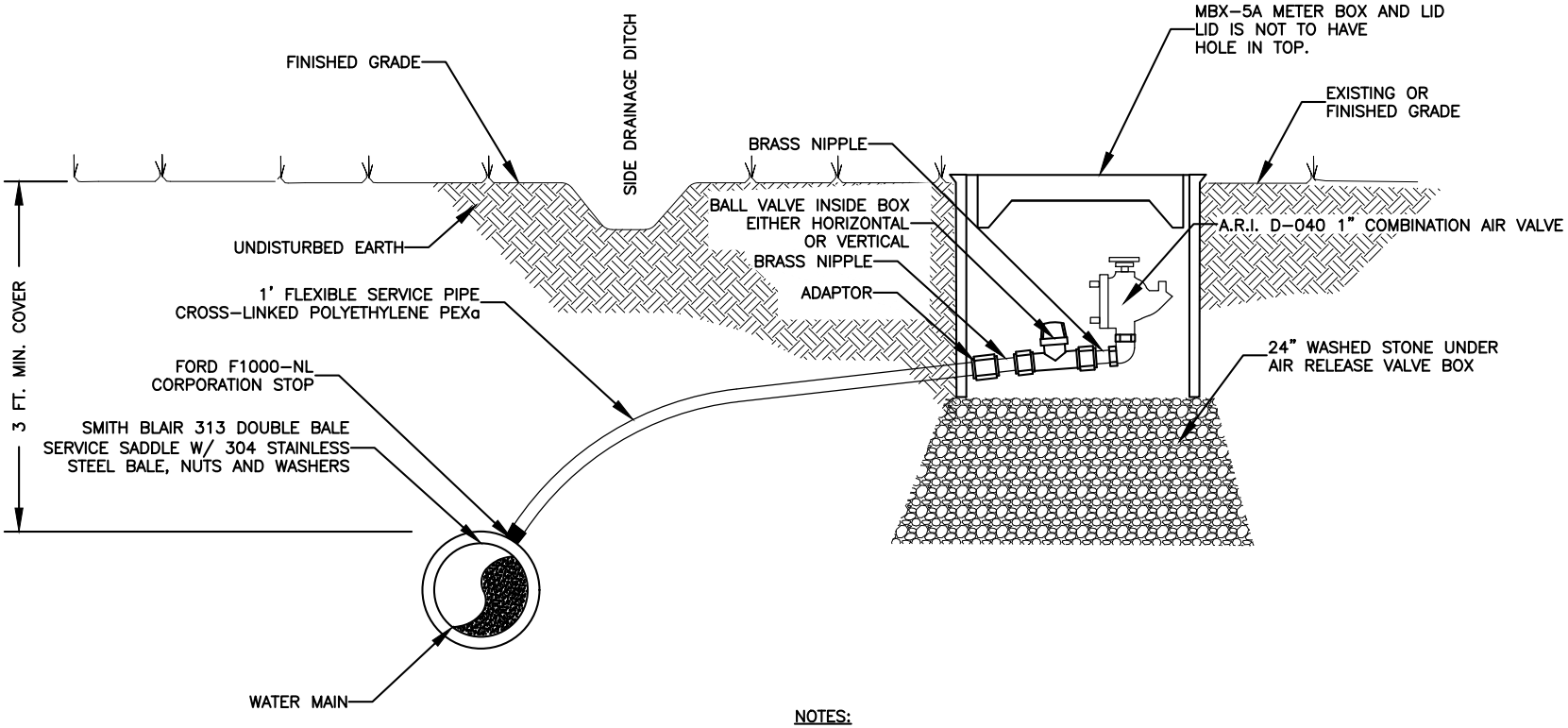

NOTES:

1. PIPE AND FITTINGS SIZE SHALL MATCH THE SIZE OF THE PROPOSED AIR RELEASE VALVE TO BE INSTALLED.
2. LOCATION TO BE THE SAME AS METER BOX DETAILS.
3. TRACER WIRE NOT SHOWN FOR CLARITY. TRACER WIRE SHALL BE CONNECTED TO WATER MAIN TRACER USING CONNECTORS APPROVED BY THE MANUFACTURERS. (SEE VALVE BOX INSTALLATION)
4. ACTUAL LOCATION OF AIR RELEASE VALVE SHALL BE COORDINATED WITH THE CITY AND PROPERTY OWNER.

STANDARD AIR RELEASE VALVE INSTALLATION DETAIL

WD DWG. NO. 7

DATE: 04/08/2019

SCALE: NOT TO SCALE

City of Hendersonville Engineering Department
305 Williams Street
Hendersonville, NC 28792
(828) 697-3000 (office)
www.cityofhendersonville.org

METER SIZE	METER BOX SIZE	METER BOX	STRAIGHT BALL SERVICE VALVE	STRAIGHT DUAL CARTRIDGE CHECK VALVE
3/4" *	3/4"	FORD CB111-233-NL	FORD B81-233W-NL	HHC81-333-NL
1"	1"	FORD CB111-444-L-T-NL	FORD B81-344W-NL	HHC81-444-NL

* REQUIRES REDUCER L84-34G NL

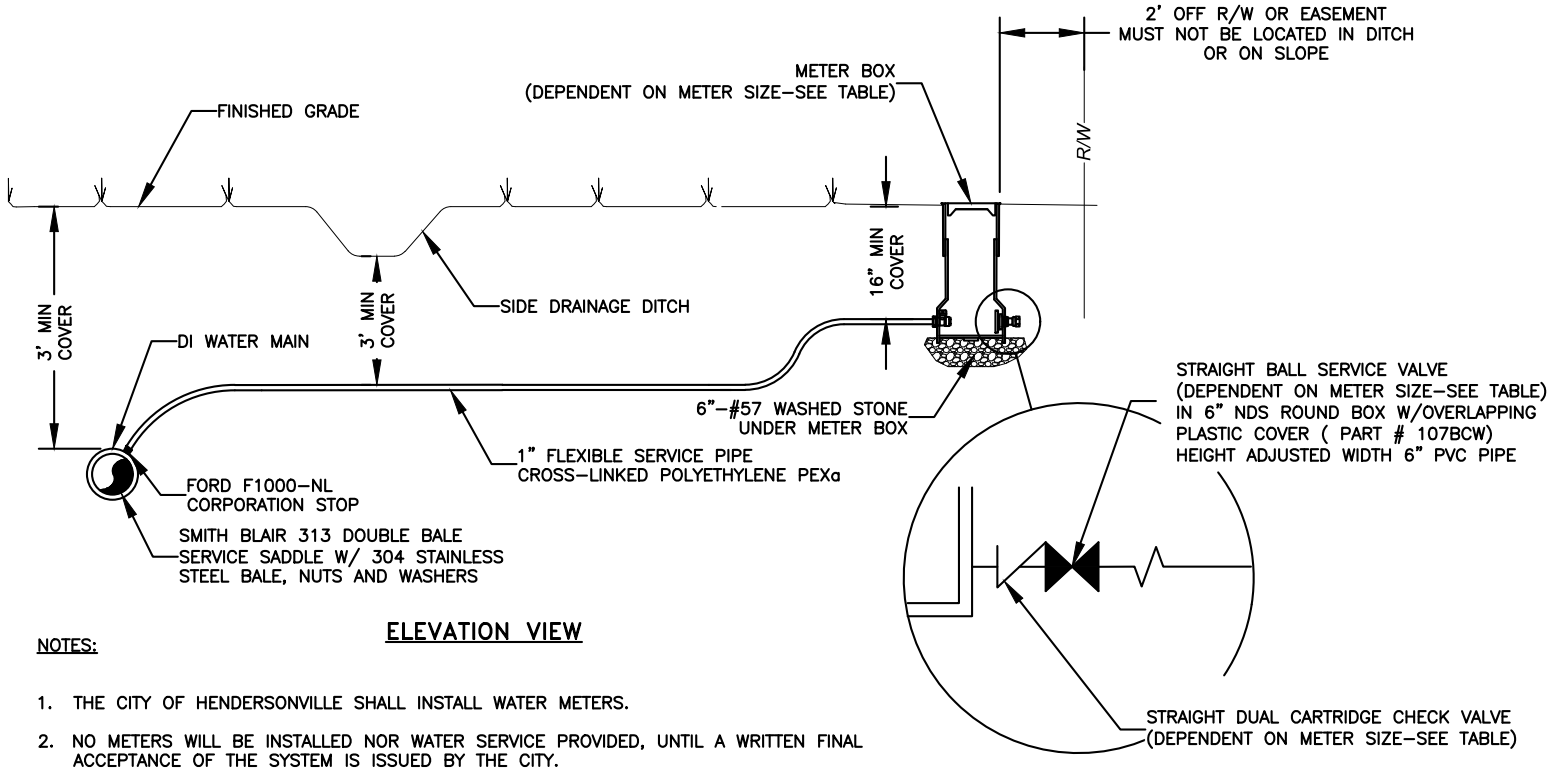

ELEVATION VIEW

NOTES:

1. THE CITY OF HENDERSONVILLE SHALL INSTALL WATER METERS.
2. NO METERS WILL BE INSTALLED NOR WATER SERVICE PROVIDED, UNTIL A WRITTEN FINAL ACCEPTANCE OF THE SYSTEM IS ISSUED BY THE CITY.
3. METER BOX SHALL BE BITUMINOUS COATED, CAST IRON BASE, INNER BARREL, AND OUTER BARREL WITH 1-7/8" TOUCH-READ HOLE IN LID.
4. EXTEND TRACER WIRE FROM MAIN TO METER BOX. WIRE NOT SHOWN FOR CLARITY. TRACER WIRE WILL BE A 19 GAUGE, TIN COATED, COPPER CONDUCTOR WITH POLYETHYLENE INSULATION. CORE MATERIAL COMPRISED OF HIGH-TENACITY, WOVEN POLYESTER WITH WATER BLOCKING YARNS ENCAPSULATED IN 30 MIL. BLUE HDPE JACKET; PROVIDING CORROSION RESISTANCE, FLEXIBILITY, IMPACT STRENGTH AND 1800 LBS. TENSILE STRENGTH. TRACER WIRE WILL NOT CONDUCT AN ELECTRICAL CURRENT WHEN STRUCK BY LIGHTNING AND IS DESIGNED FOR DIRECT BURY AND DIRECTIONAL BORING APPLICATIONS. WHEN SPLICES AND LATERAL CONNECTIONS ARE MADE, ONLY GEL FILLED CONNECTORS DESIGNED FOR WIRE WITH WOVEN POLYESTER FIBER CORE ARE TO BE USED. TRACER WIRE SHALL BE TERMINATED IN METER BOX AT MOUNTED TRACE-SAFE® LOCATING CLIP, MOUNTED A MAXIMUM OF 3" FROM TOP OF BOX WITH 304 SS BOLT. TRACER WIRE AND CONNECTORS SHALL BE TRACE-SAFE® WATER BLOCKING TRACER WIRE AND RELATED CONNECTORS, MANUFACTURED BY NEPTCO, INC., OR EQUIVALENT APPROVED BY ENGINEER, AND PRODUCED IN THE UNITED STATES OF AMERICA.

MINIMUM SERVICE LINE:

1" SERVICE LATERAL INSTALLATION

DATE: 04/29/2019 WD DWG. NO. 8

SCALE: NOT TO SCALE

City of Hendersonville Engineering Department
305 Williams Street
Hendersonville, NC 28792
(828) 697-3000 (office)
www.cityofhendersonville.org

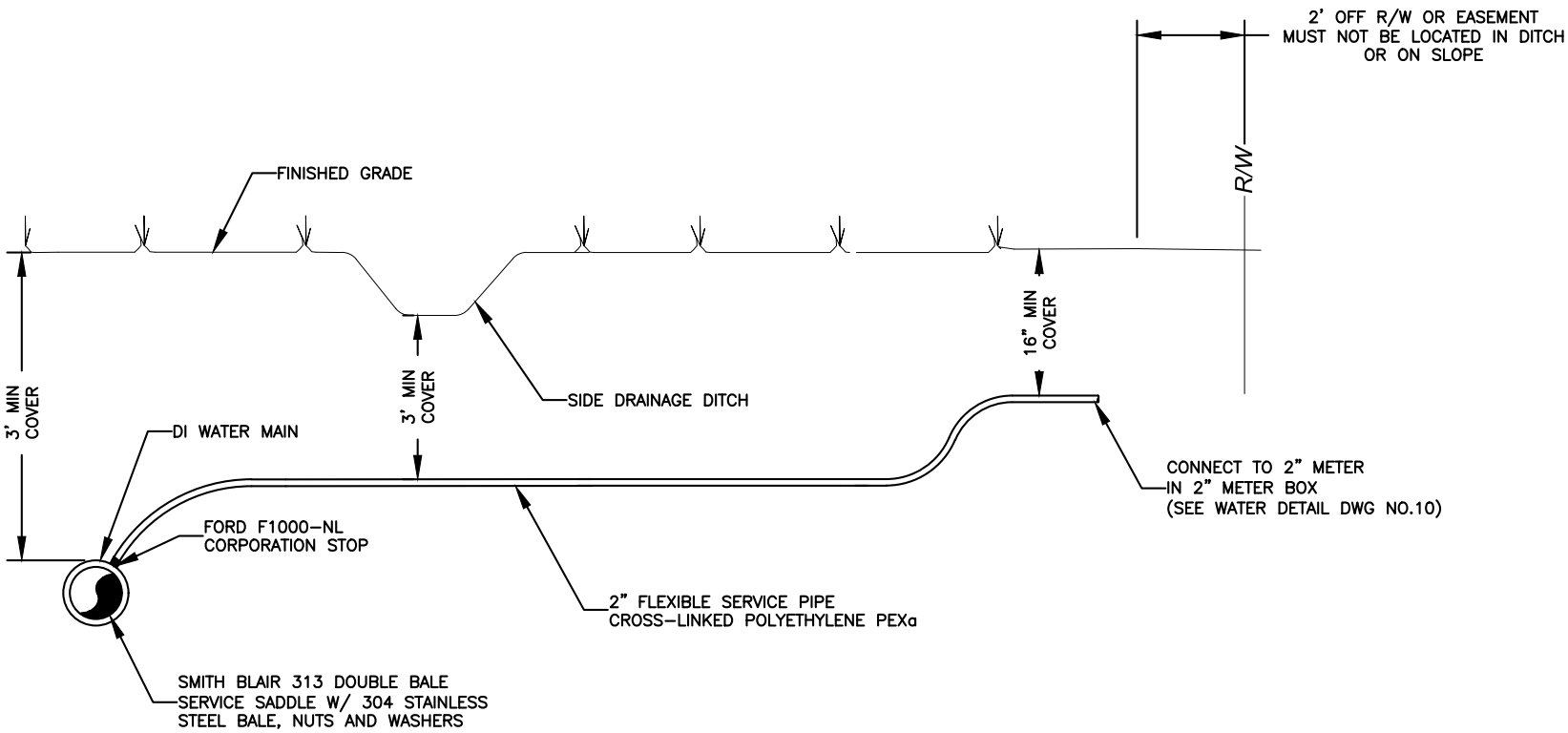

ELEVATION VIEW

NOTES:

1. THE CITY OF HENDERSONVILLE SHALL INSTALL WATER METERS AS SERVICE TAPS ARE APPLIED FOR.

2. EXTEND TRACER WIRE FROM MAIN TO METER BOX. WIRE NOT SHOWN FOR CLARITY. TRACER WIRE WILL BE A 19 GAUGE, TIN COATED, COPPER CONDUCTOR WITH POLYETHYLENE INSULATION. CORE MATERIAL COMPRISED OF HIGH-TENACITY, WOVEN POLYESTER WITH WATER BLOCKING YARNS ENCAPSULATED IN 30 MIL. BLUE HDPE JACKET; PROVIDING CORROSION RESISTANCE, FLEXIBILITY, IMPACT STRENGTH AND 1800 LBS. TENSILE STRENGTH. TRACER WIRE WILL NOT CONDUCT AN ELECTRICAL CURRENT WHEN STRUCK BY LIGHTNING AND IS DESIGNED FOR DIRECT BURY AND DIRECTIONAL BORING APPLICATIONS. WHEN SPLICES AND LATERAL CONNECTIONS ARE MADE, ONLY GEL FILLED CONNECTORS DESIGNED FOR WIRE WITH WOVEN POLYESTER FIBER CORE ARE TO BE USED. TRACER WIRE SHALL BE TERMINATED IN METER BOX AT MOUNTED TRACE-SAFE® LOCATING CLIP, MOUNTED A MAXIMUM OF 3" FROM TOP OF BOX WITH 304 SS BOLT. TRACER WIRE AND CONNECTORS SHALL BE TRACE-SAFE® WATER BLOCKING TRACER WIRE AND RELATED CONNECTORS, MANUFACTURED BY NEPTCO, INC., OR EQUIVALENT APPROVED BY ENGINEER, AND PRODUCED IN THE UNITED STATES OF AMERICA.

2" SERVICE LATERAL INSTALLATION

DATE: 01/12/2019 WD DWG. NO. 9

SCALE: NOT TO SCALE

City of Hendersonville Engineering Department
305 Williams Street
Hendersonville, NC 28792
(828) 697-3000 (office)
www.cityofhendersonville.org

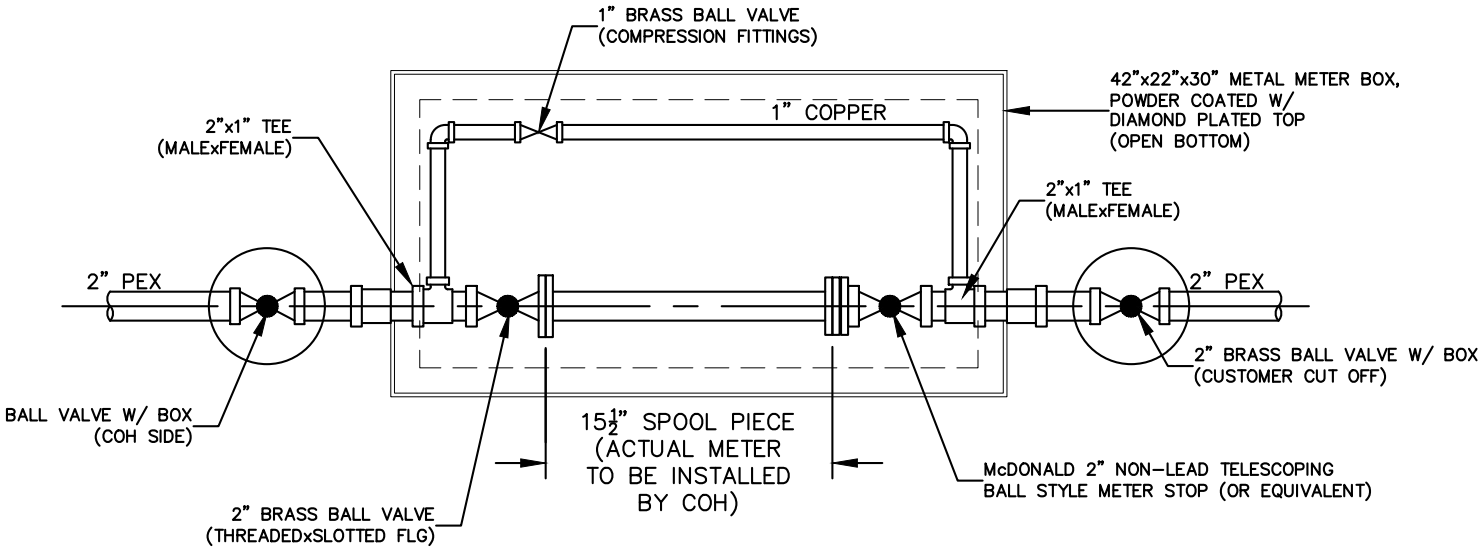

PLAN

NOT TO SCALE

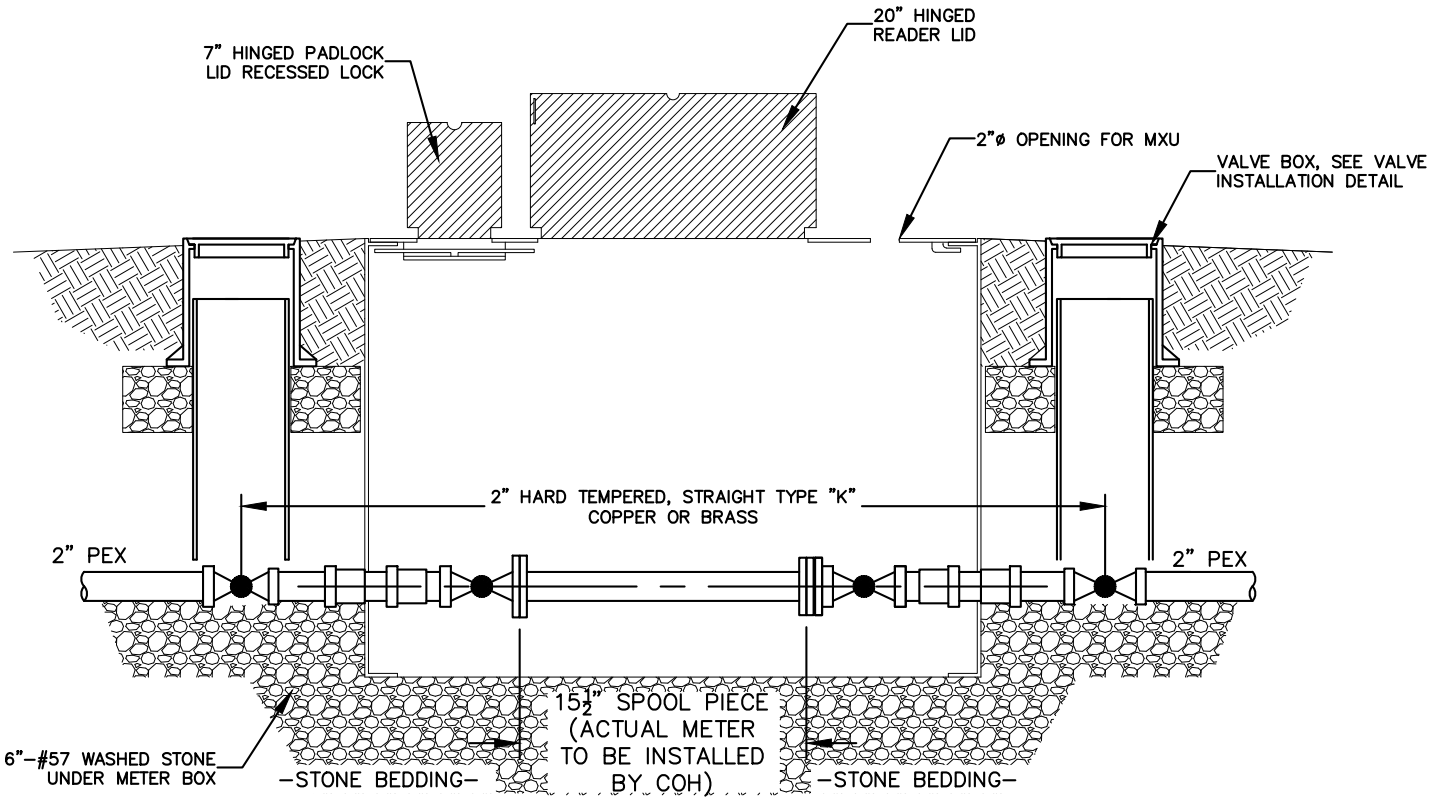

ELEVATION

NOT TO SCALE

DATE: 06/20/2019 WD DWG. NO. 10

SCALE: NOT TO SCALE

City of Hendersonville Engineering Department
305 Williams Street
Hendersonville, NC 28792
(828) 697-3000 (office)

www.cityofhendersonville.org

8/2/2019 9:40:32 AM, mpomraning

2" METER BOX AND INSTALLATION

NOTE:

METER VAULT BOX AND INTERNAL PIPING TO BE PROVIDED BY AND INSTALLED BY CONTRACTOR.

METER VAULT BOX TO BE MANUFACTURED BY JACKSON WELDING OR ZUMCO.

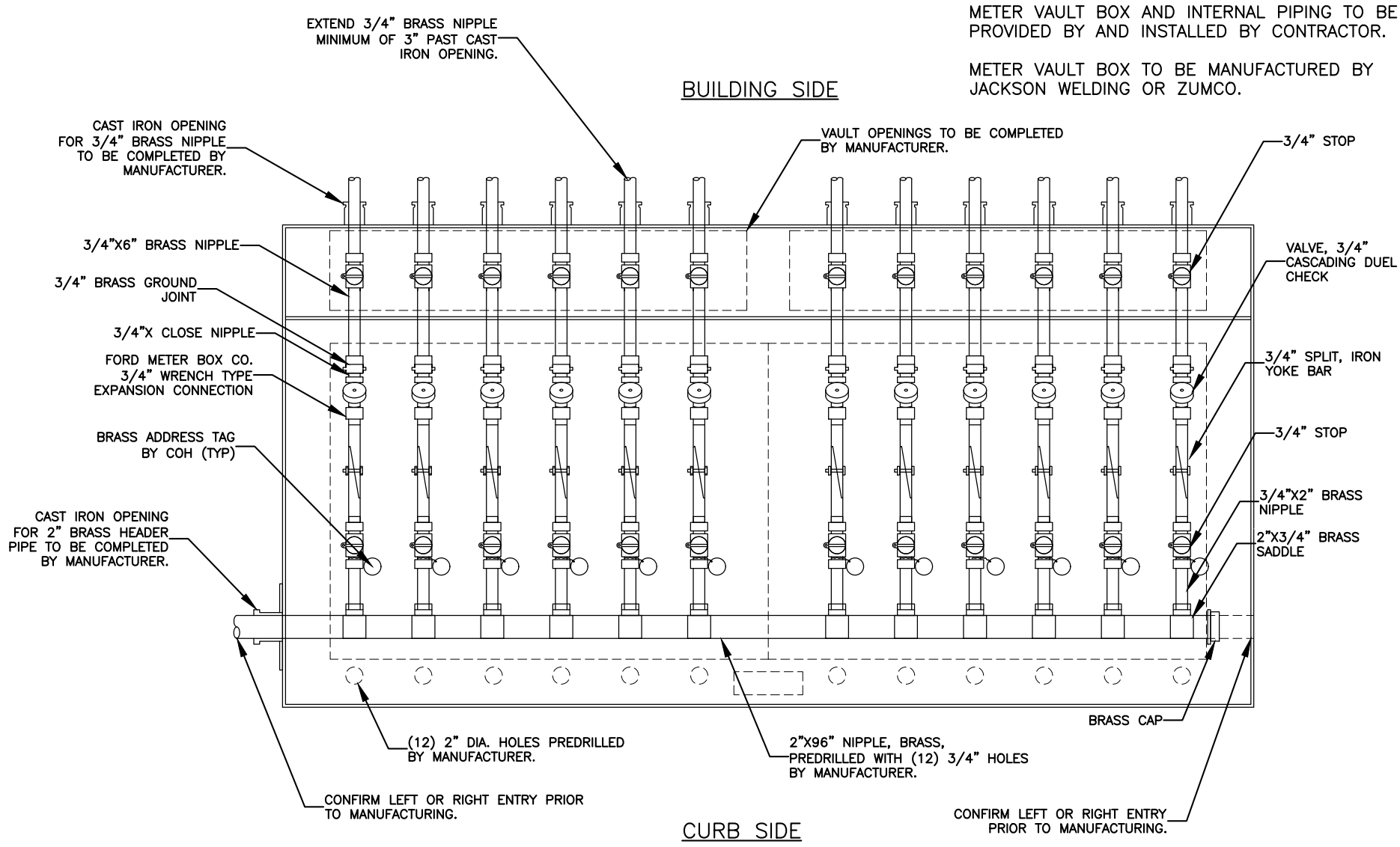

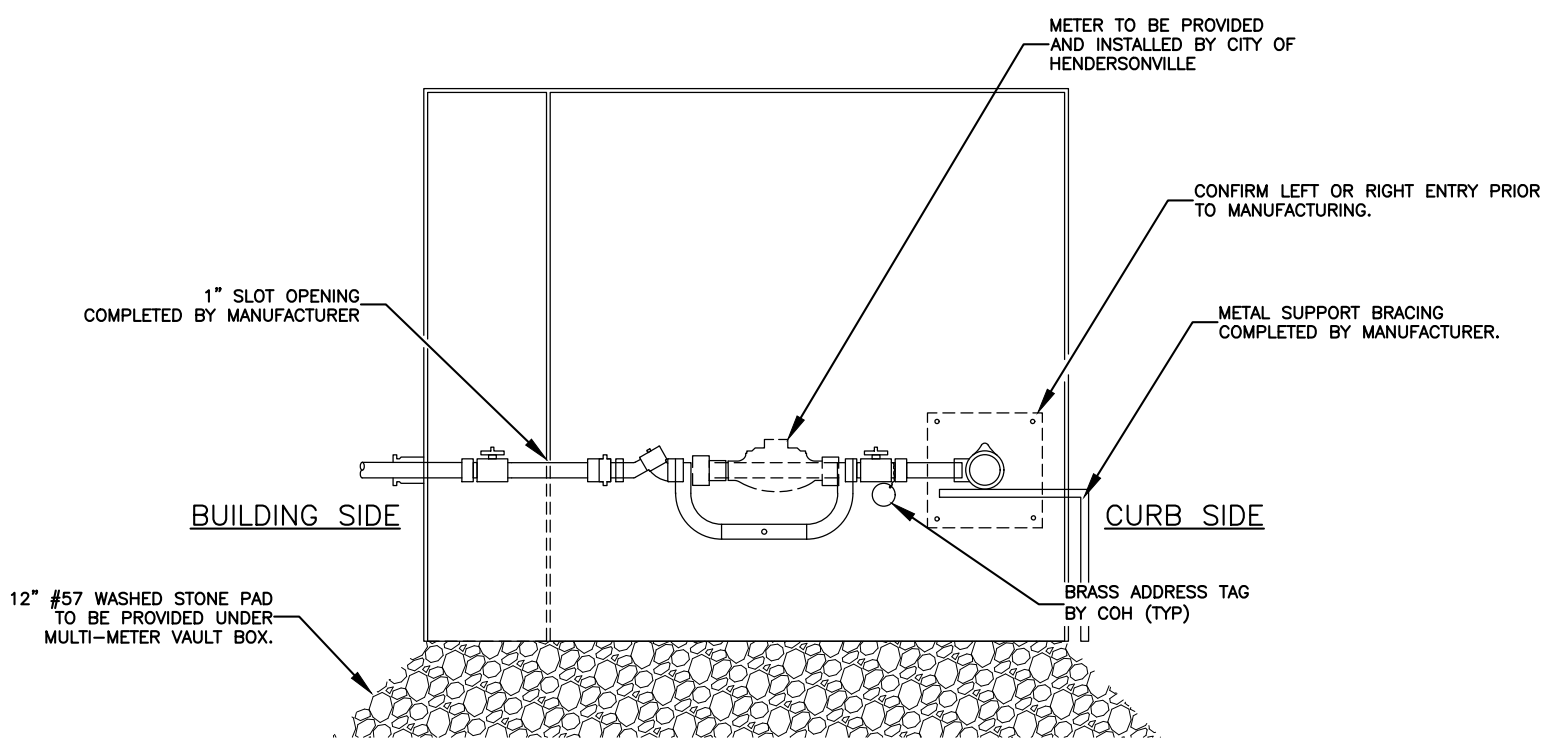

MULTI-METER VAULT ASSEMBLY PARTS LIST

QUANTITY	DESCRIPTION	CITY PART NUMBER
1 EA.	2"X96" NIPPLE, BRASS	
12 EA.	FORD METER BOX CO. 3/4" WRENCH TYPE EXPANSION CONNECTION	EC-23W-NL
12 EA.	2"X3/4" NPT SADDLE, BRASS NL	
12 EA.	3/4"X CLOSE NIPPLE, BRASS NL	N-3685-12
12 EA.	3/4"X2" NIPPLE, BRASS NL	N-3710-13
12 EA.	3/4"X6" NIPPLE, BRASS NL	N-3710-17
12 EA.	3/4"X12" NIPPLE, BRASS NL	N-3710-23
12 EA.	3/4" YOKE, IRON YOKE BAR, SPLIT, 2-PIECE Y503	Y-0504-02
12 EA.	STOP, 3/4" STRAIGHT BALL VALVE FOR YOKE NL	S-7915-33
12 EA.	VALVE, 3/4" CASCADING DUEL CHECK, NL	V-0494-33
12 EA.	UNION, 3/4" BRASS GROUND JOINT, NL	U-5435-00
12 EA.	STOP, 3/4" CURB VALVE, MALE, NL	S-7915-00
1 EA.	CAP, 2" PIPE, BRASS NL	C-0682-08

NOTES:

1. COH WILL PROVIDE STAMPED ADDRESS TAGS.
2. THE CONTRACTOR WILL PROVIDE A LICENSED PLUMBER TO VERIFY LINE SERVICES IN ALL MULTI-METER BOXES.

DATE: 07/25/2019 WD DWG. NO. 11

SCALE: NOT TO SCALE

City of Hendersonville Engineering Department
305 Williams Street
Hendersonville, NC 28792
(828) 697-3000 (office)

www.cityofhendersonville.org

8/2/2019 9:40:33 AM, mpomraning

MULTI-METER VAULT ASSEMBLY DETAIL

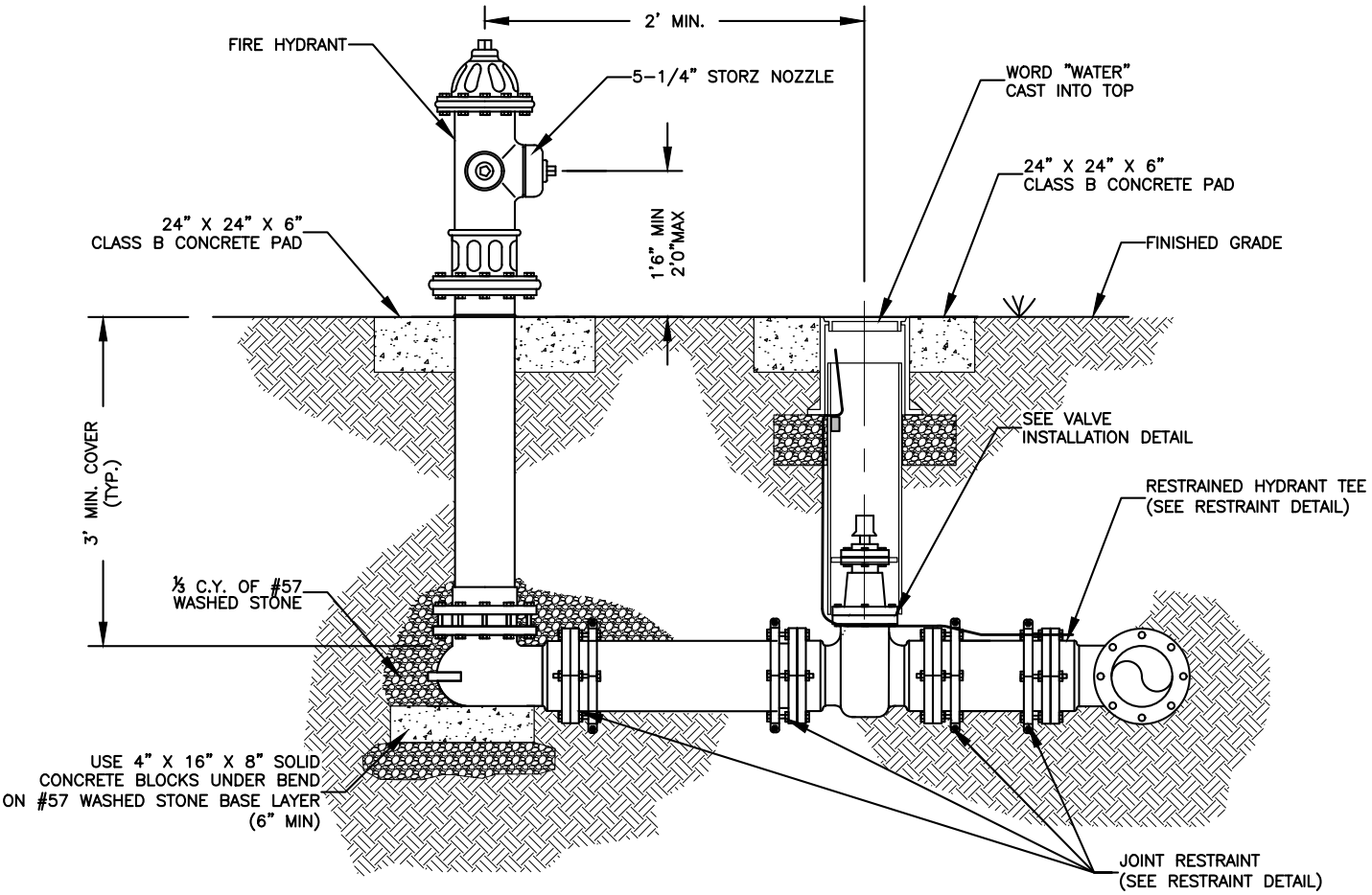

NOTES:

1. FIRE HYDRANTS SHALL BE RATED TO A MINIMUM 250 PSI WORKING PRESSURE IN ACCORDACE WITH AWWA C-502 UNLESS SPECIFIED AS 350 PSI BY THE CITY. HYDRANTS SHALL HAVE A 5¼-INCH BARREL AND STORZ CONNECTION.
2. ALL VALVES AND HYDRANTS SHALL HAVE M. J. CONNECTIONS WITH IRON RETAINING GLAND M.J. RESTRAINT.
3. FIRE HYDRANT SHALL BE FACTORY PAINTED YELLOW, WITH FIELD PAINTED TOUCH-UP, BEFORE PROJECT IS ACCEPTED.
4. HYDRANT VALVE SHALL BE PLACED AS CLOSE AS POSSIBLE TO THE MAIN, BUT DO NOT PLACE VALVE IN PROPOSED OR EXISTING CURB AND GUTTER. IF THE STREET IS SOIL AND NO PAVING IS TO BE DONE AT THIS TIME, THE LOCATION OF THE VALVE IS TO BE DETERMINED BY THE ENGINEER.
5. FIRE HYDRANTS SHALL BE PLACED AS DIRECTED BY THE ENGINEER.
6. HYDRANT BRANCH SHALL NOT BE BACK FILLED UNTIL INSPECTED AND APPROVED BY THE ENGINEER.
7. GATE VALVE AND BOX SHALL BE IN ACCORDANCE WITH STANDARD DETAIL.
8. HYDRANT EXTENSIONS AND/OR OFFSETS SHALL BE APPROVED BY THE ENGINEER.
9. FIRE HYDRANTS WHICH HAVE BEEN INSTALLED MUST BE TAGGED "OUT OF SERVICE" AND BAGGED, UTILIZING A RED CANVAS BAG WITH WHITE LETTERING, UNTIL SUCH TIME AS THE WATER MAIN TO WHICH CONNECTED IS DISINFECTED AND CONNECTED TO THE ACTIVE WATER SYSTEM.

DATE: 04/24/2019 WD DWG. NO. 12

SCALE: NOT TO SCALE

City of Hendersonville Engineering Department
305 Williams Street
Hendersonville, NC 28792
(828) 697-3000 (office)

www.cityofhendersonville.org

8/2/2019 9:40:34 AM, mpomraning

FIRE HYDRANT STANDARD INSTALLATION DETAIL

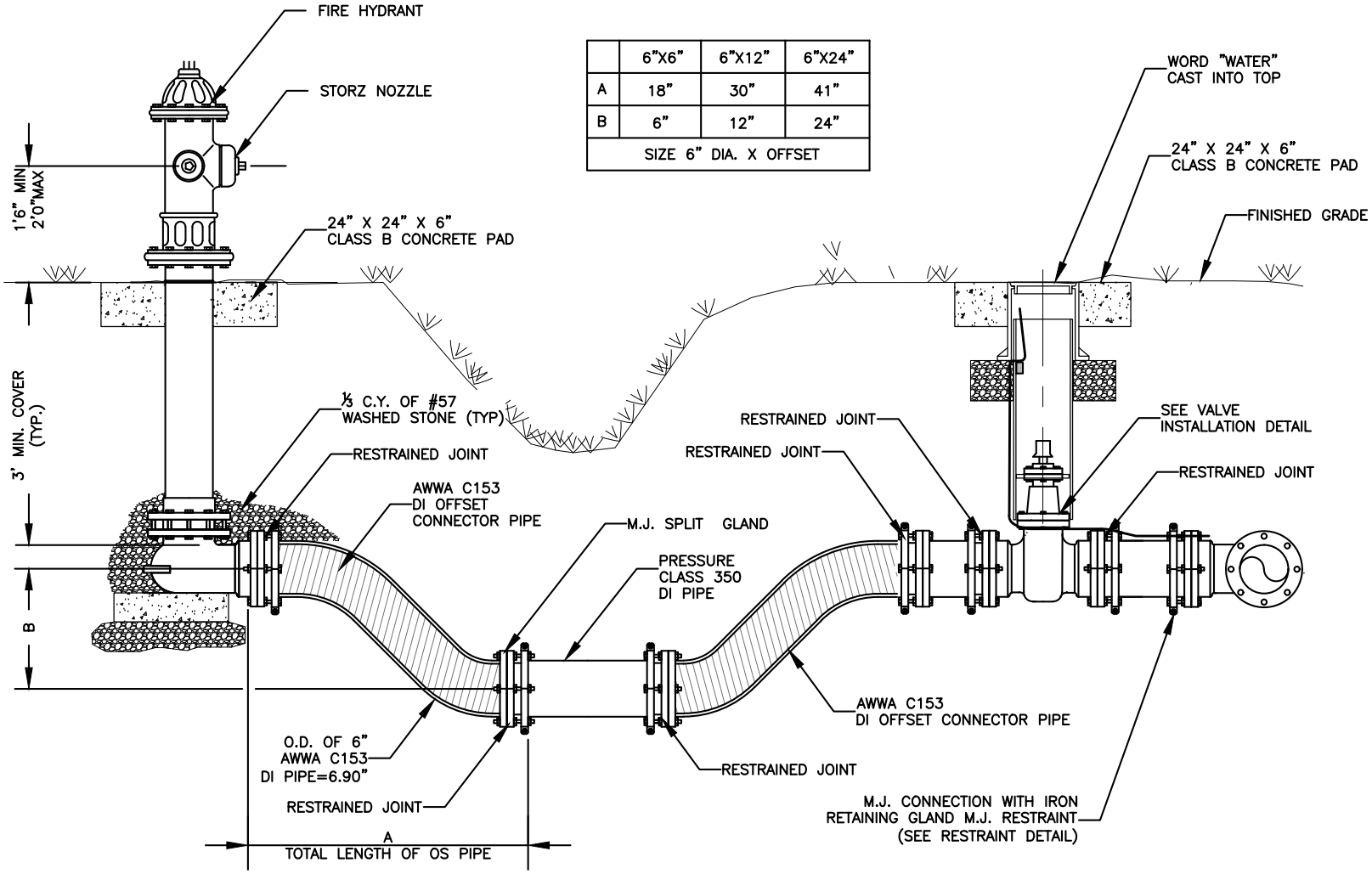

	6"X6"	6"X12"	6"X24"
A	18"	30"	41"
B	6"	12"	24"
SIZE 6" DIA. X OFFSET			

NOTES:

1. SEE FIRE HYDRANT STANDARD INSTALLATION DETAIL FOR ADDITIONAL REQUIREMENTS.
2. ALL VALVES AND HYDRANTS SHALL HAVE M.J. CONNECTIONS WITH IRON RETAINING GLAND M.J. RESTRAINT.
3. FIRE HYDRANT OFFSET CONNECTOR SHALL BE PLACED AS APPROVED BY THE ENGINEER.
4. OFFSET CONNECTOR SHALL NOT BE BACK FILLED UNTIL INSPECTED AND APPROVED BY ENGINEER.

FIRE HYDRANT DITCH INSTALLATION DETAIL

DATE: 01/12/2019 WD DWG. NO. 13

SCALE: NOT TO SCALE

City of Hendersonville Engineering Department
305 Williams Street
Hendersonville, NC 28792
(828) 697-3000 (office)
www.cityofhendersonville.org

NOTES:

1. RETAINING WALLS FOR USE IN CONJUNCTION WITH THE INSTALLATION OF FIRE HYDRANTS SHALL BE INSTALLED WHERE SHOWN ON THE PLANS OR AS DIRECTED BY THE ENGINEER.
2. FIGURES SHOWN REPRESENT MINIMUMS ONLY. ALL RETAINING WALLS ABOVE 4' SHALL BE DESIGNED BY THE ENGINEER OF WORK AND PERMITTED BY THE AGENCY OF JURISDICTION.
3. VERTICAL BARS TO BE INSTALLED AT 16" ON CENTER. INSTALL MINIMUM 1-BAR IN THE CENTER OF THE FOOTING FOR WALL.
4. PAD SIZE TO MATCH SIZE OF PAD REQUIRED FOR FIRE HYDRANT TO BE INSTALLED.
5. GRAVITY WALL MAY BE INSTALLED ONLY WITH PRIOR APPROVAL OF SUBMITTAL FOR INSTALLATION.
6. AN EASEMENT MAY BE REQUIRED DEPENDING ON THE LOCATION OF THE WALL.

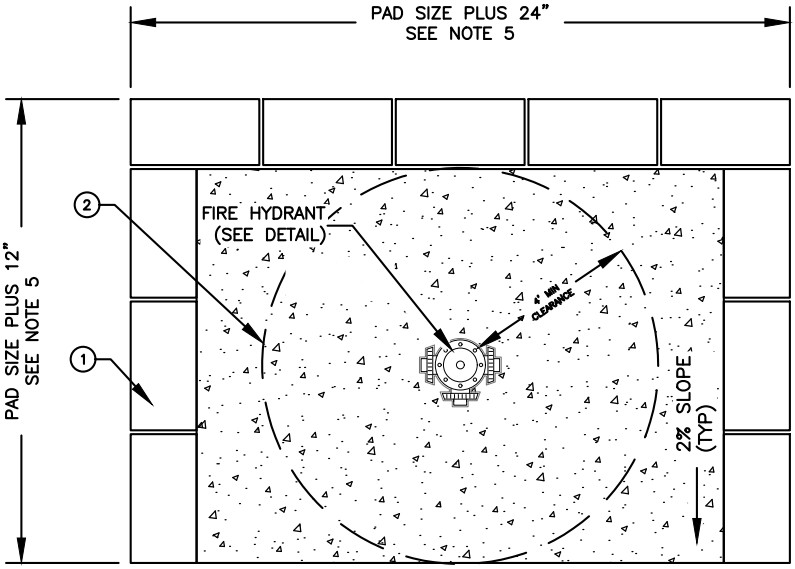

PLAN VIEW

ITEM NO.	SIZE AND DESCRIPTION
1	200MM X 200MM X 400MM (8" X 8" X 16") CONCRETE OR SLUMP BLOCK (SOLID GROUT ALL CELLS), SEE NOTE 7
2	COLD JOINT STRIP
3	CLASS B CONCRETE PAD OVER 6" CABC
4	#4 REBAR TYPICAL, SEE NOTE 3
5	8" X 8" CONCRETE FOOTING,
6	CONCRETE CAP BLOCK,

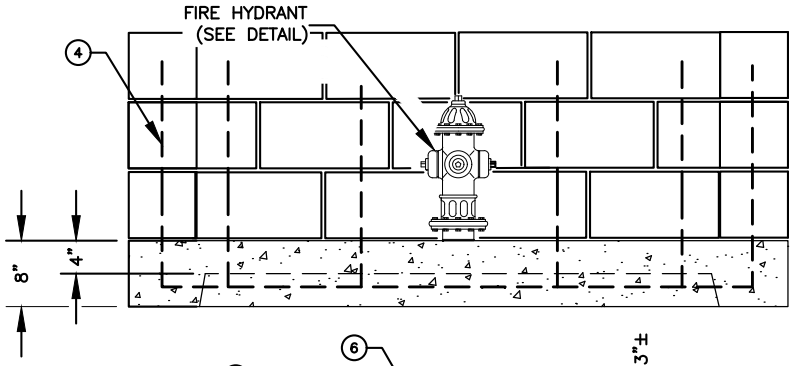

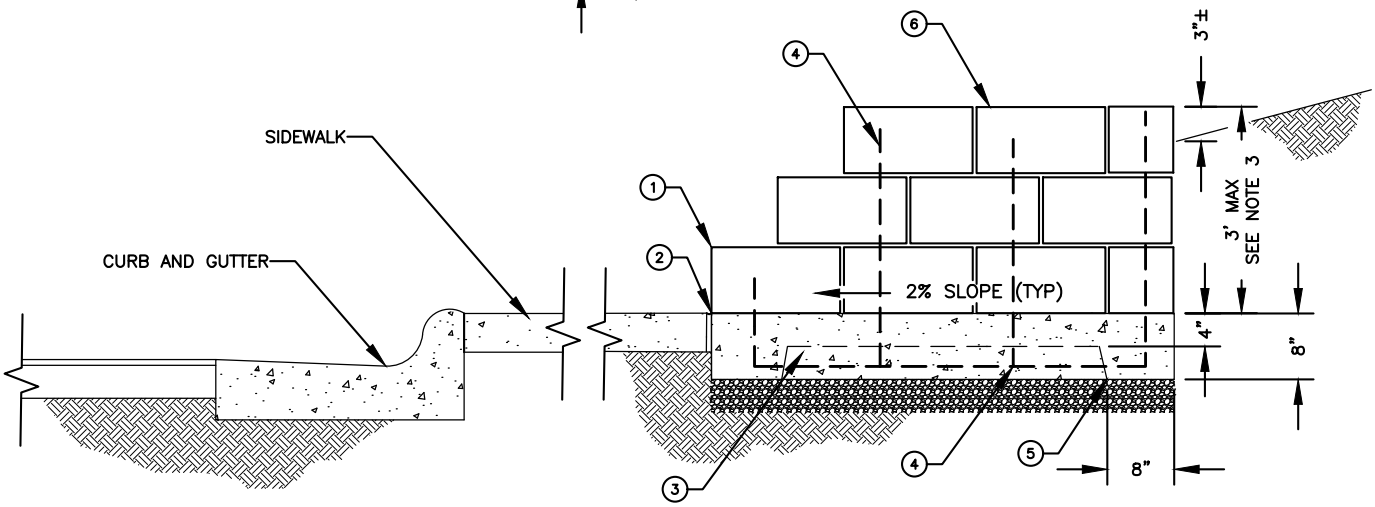

SECTION VIEW

DATE: 01/12/2019

SCALE: NOT TO SCALE WD DWG. NO. 14

City of Hendersonville Engineering Department
305 Williams Street
Hendersonville, NC 28792
(828) 697-3000 (office)

www.cityofhendersonville.org

8/2/2019 9:40:37 AM, mpomraning

FIRE HYDRANT SLOPE INSTALLATION DETAIL

THE CITY OF HENDERSONVILLE · N.C. 1847

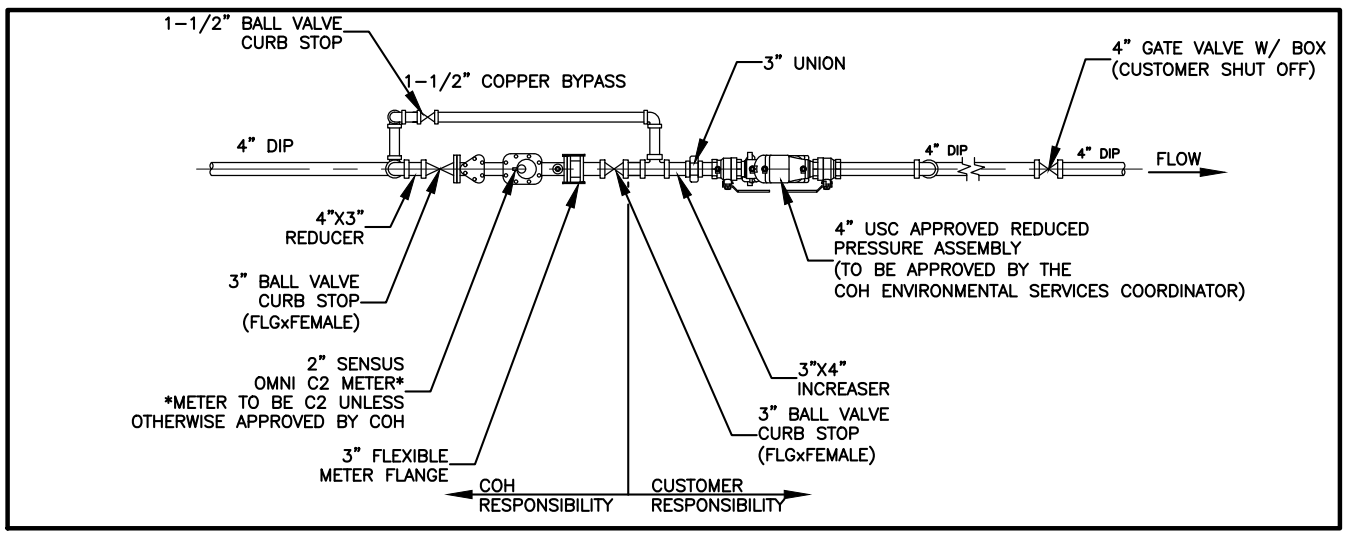

PLAN VIEW

(2" METER ASSEMBLY WITH 4" DOMESTIC WATER LINE)

NOT TO SCALE

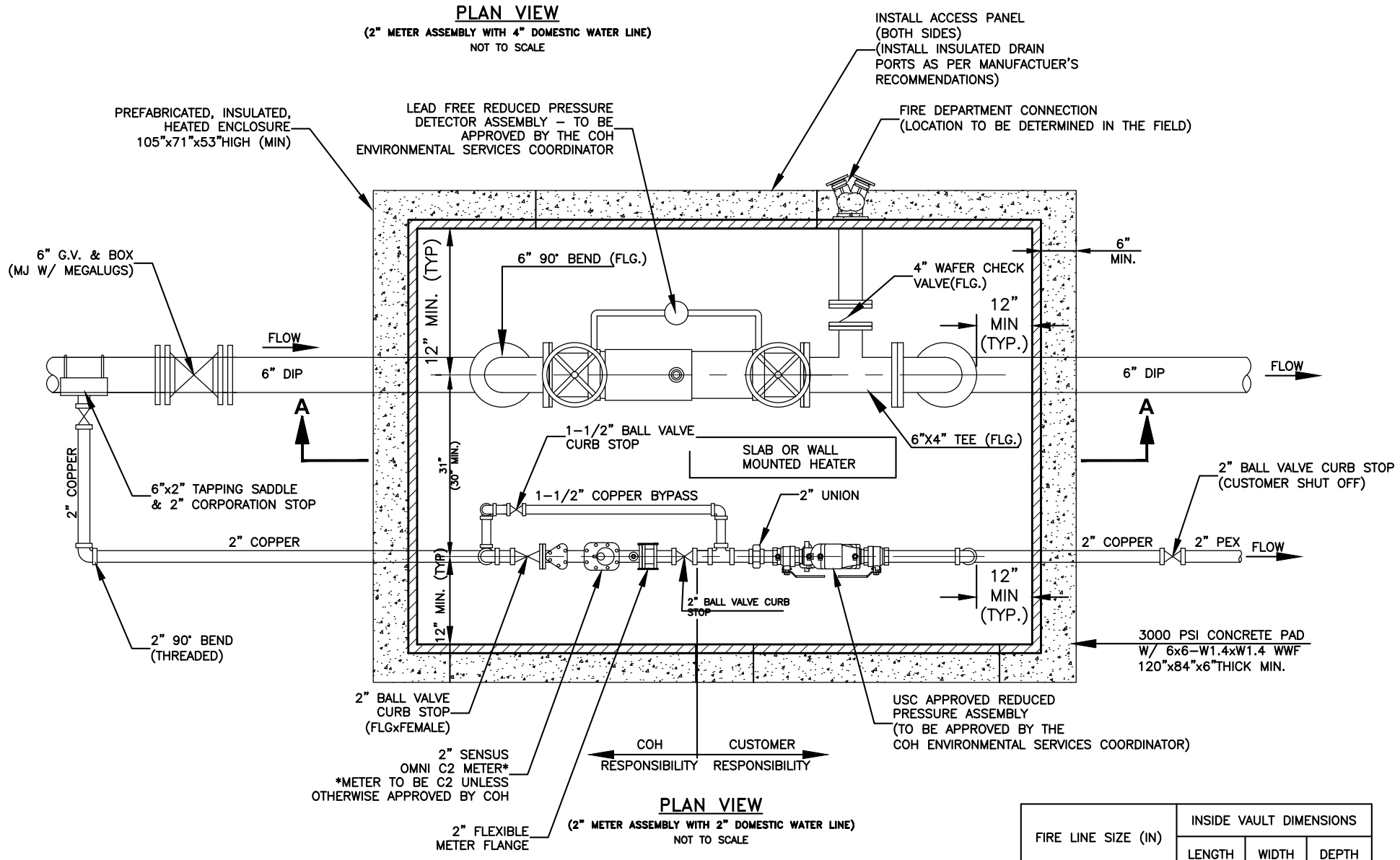

PLAN VIEW

(2" METER ASSEMBLY WITH 2" DOMESTIC WATER LINE)

NOT TO SCALE

FIRE LINE SIZE (IN)	INSIDE VAULT DIMENSIONS		
	LENGTH	WIDTH	DEPTH
6"	6'-0"	6'-0"	6'-6"
8"	8'-0"	6'-0"	7'-0"
10"	8'-0"	6'-0"	7'-0"

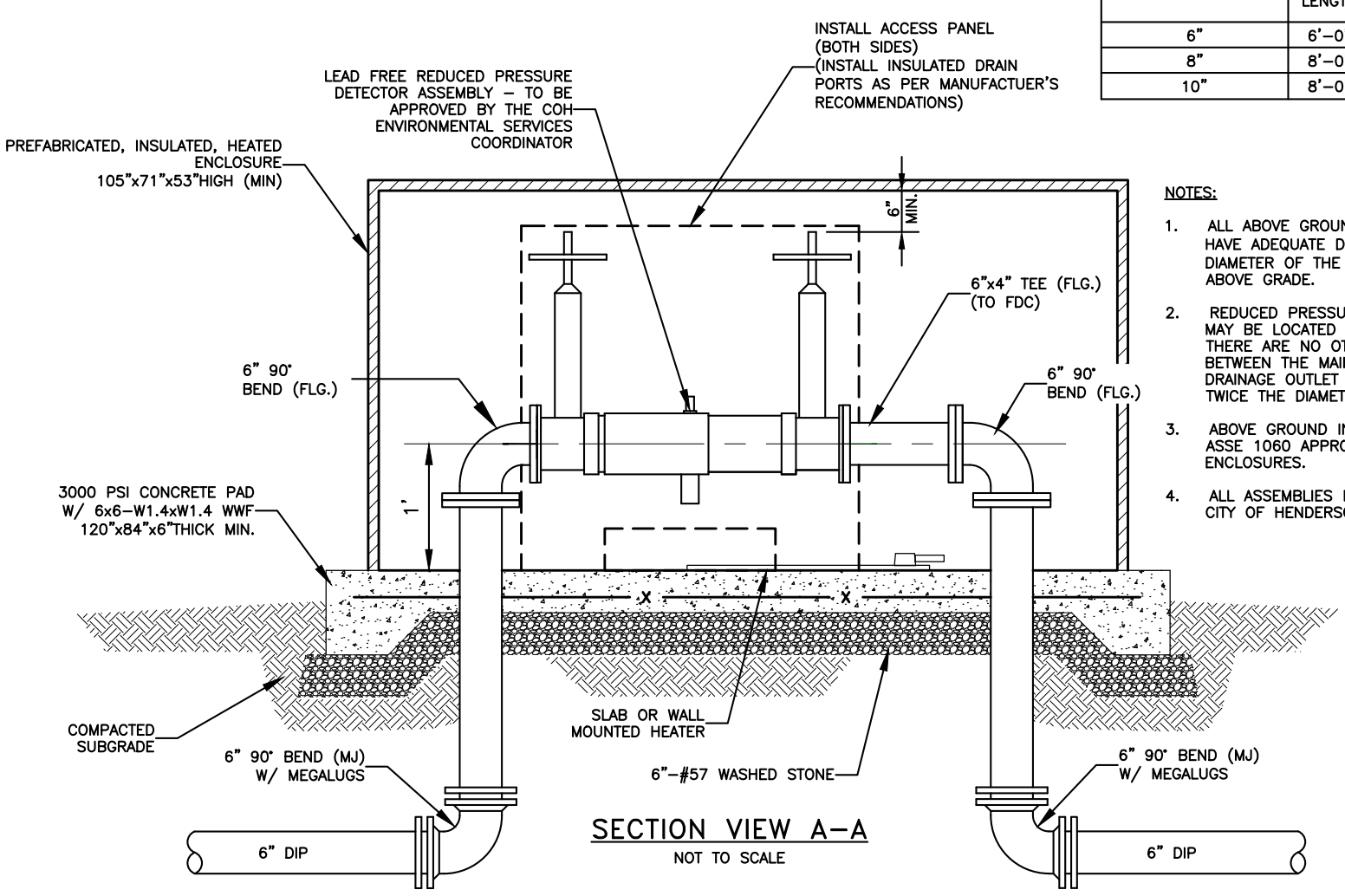

SECTION VIEW A-A

NOT TO SCALE

NOTES:

1. ALL ABOVE GROUND ENCLOSURES MUST HAVE ADEQUATE DRAINAGE (TWICE THE DIAMETER OF THE SUPPLY PIPE) TO DAYLIGHT ABOVE GRADE.
2. REDUCED PRESSURE BACKFLOW ASSEMBLIES MAY BE LOCATED IN A BUILDING PROVIDED THERE ARE NO OTHER UNPROTECTED TAPS BETWEEN THE MAIN AND THE BUILDING. DRAINAGE OUTLET N THE BUILDING MUST BE TWICE THE DIAMETER OF THE SUPPLY PIPE.
3. ABOVE GROUND INSULATED VAULTS MUST BE ASSE 1060 APPROVED ABOVE GROUND ENCLOSURES.
4. ALL ASSEMBLIES MUST BE ON THE CURRENT CITY OF HENDERSONVILLE APPROVAL LIST.

DATE: 01/12/2019 WD DWG. NO. 15

SCALE: NOT TO SCALE

City of Hendersonville Engineering Department
305 Williams Street
Hendersonville, NC 28792
(828) 697-3000 (office)

www.cityofhendersonville.org

8/2/2019 9:40:38 AM, mpomraning

COMMERCIAL WATER SERVICE

WITH FIRE LINE

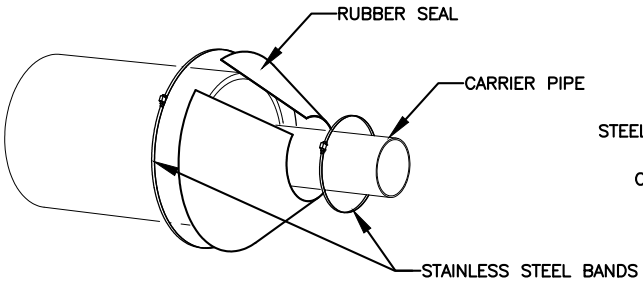

CASING END SEAL

RESTRAINED: KEEPS CARRIER AT BOTTOM OF CASING WHILE RESTRAINING AGAINST MOVEMENT

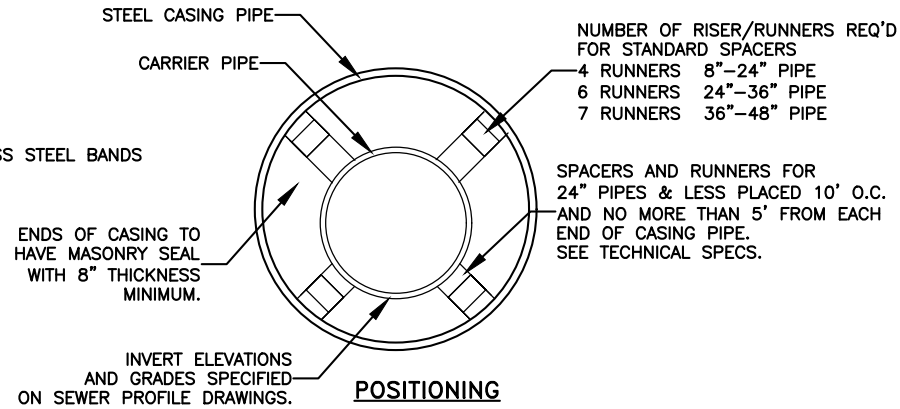

POSITIONING

NOTES:

1. RESTRAINED POSITIONING TO BE USED AT ALL TIMES.
2. CARRIER PIPE JOINTS SHALL BE MECHANICALLY RESTRAINED, DUCTILE IRON OR C900 PVC ONLY.
3. STAINLESS STEEL CASING SPACERS SHALL BE STYLE CCS AS MANUFACTURED BY CASCADE WATERWORKS MFG. CO. OF YORKVILLE, IL OR ENGINEER APPROVED EQUIVALENT.
4. CASING END SEAL SHALL BE STYLE CCES AS MANUFACTURED BY CASCADE WATERWORKS MFG. CO. OF YORKVILLE, IL OR ENGINEER APPROVED EQUIVALENT.

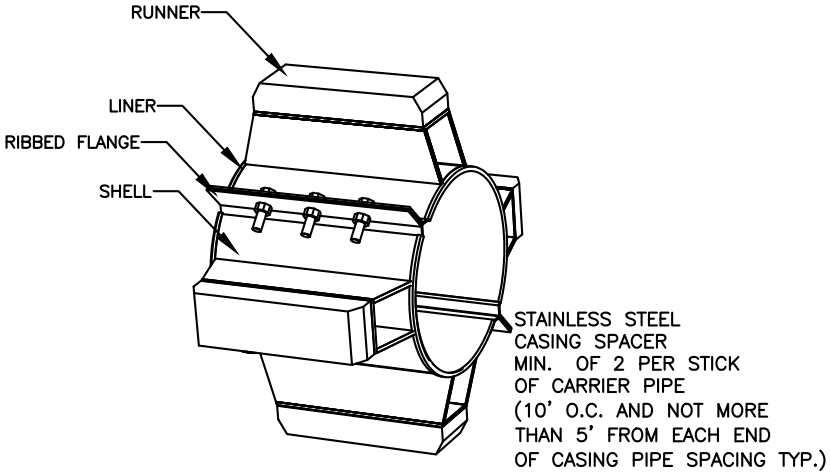

STAINLESS STEEL CASING SPACER

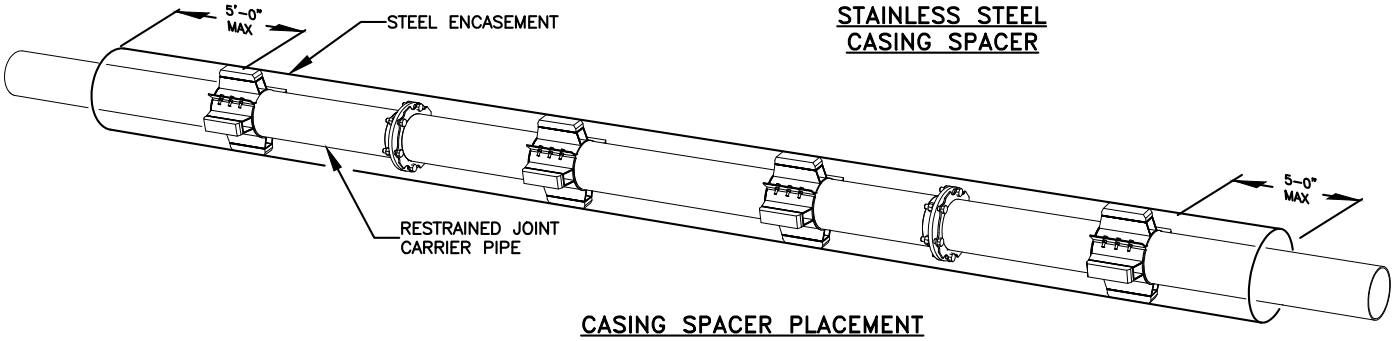

CASING SPACER PLACEMENT DIAGRAM

DATE: 01/12/2019 WD DWG. NO. 16

SCALE: NOT TO SCALE

City of Hendersonville Engineering Department
305 Williams Street
Hendersonville, NC 28792
(828) 697-3000 (office)

www.cityofhendersonville.org

8/2/2019 9:40:40 AM, mpomraning

CARRIER PIPE IN STEEL ENCASEMENT

DETAIL

THE CITY OF HENDERSONVILLE, N.C. 1847

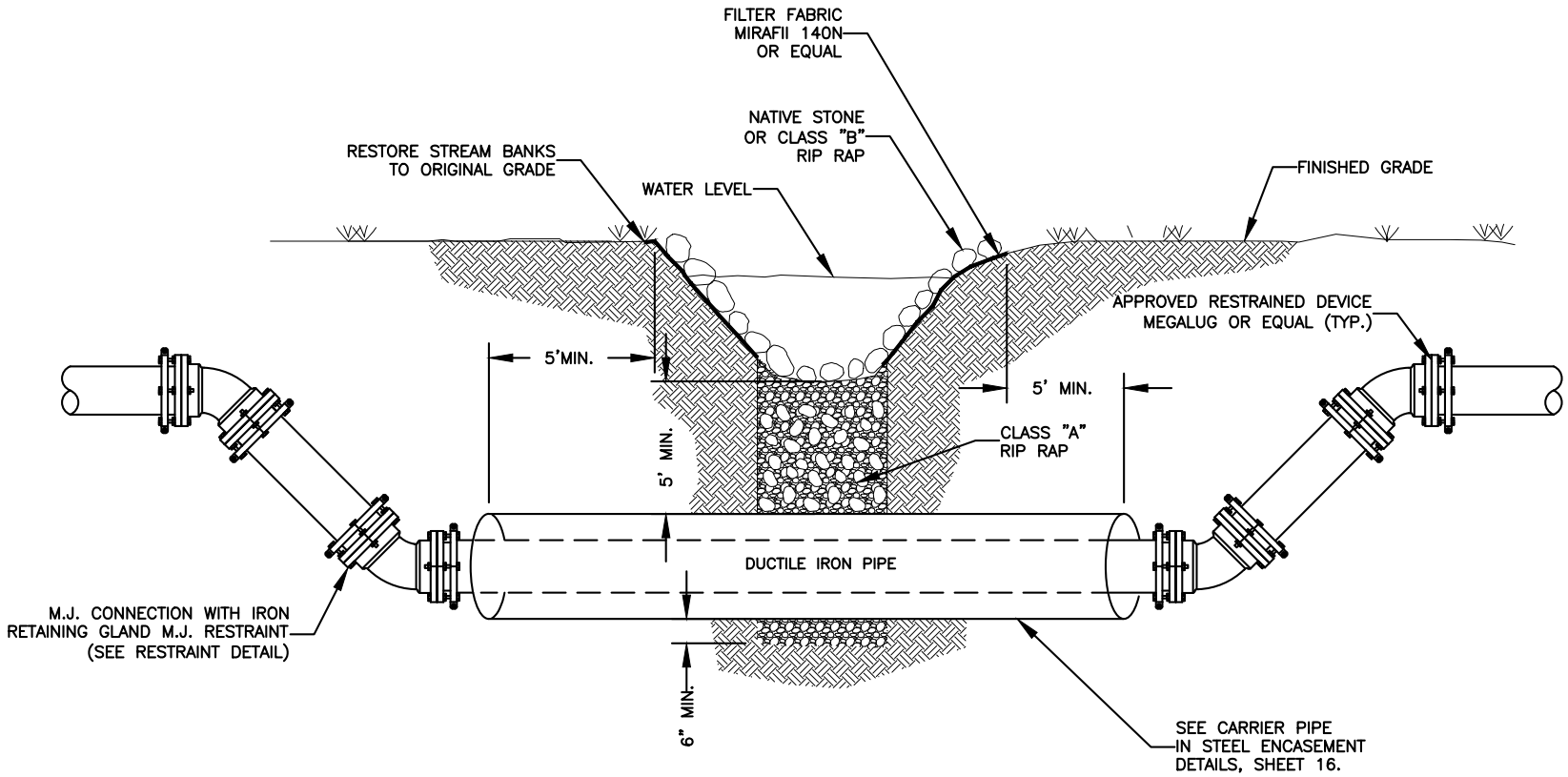

*TRACER WIRE NOT SHOWN FOR CLARITY. TRACER WIRE SHALL BE CONNECTED TO WATER MAIN TRACER USING CONNECTORS APPROVED BY THE MANUFACTURERS.

OPEN CUT BELOW CREEK BOTTOM DETAIL

DATE: 01/12/2019 WD DWG. NO. 17

SCALE: NOT TO SCALE

City of Hendersonville Engineering Department
305 Williams Street
Hendersonville, NC 28792
(828) 697-3000 (office)
www.cityofhendersonville.org

VAULT PART DIMENSIONS												
METER SIZE	A	B	C	D*	E	F	G	H	H(I)	J	K	L
4"	10'–0"	6'–0"	4'–0"	1'–4 5/16"	13"	9"	7 ½"	14"	20"	6 ½"	6 ½"	8"
6"	10'–0"	6'–0"	4'–6"	1'–8⅛"	16"	10 ½"	9"	18"	24"	8"	8"	12"
8"	12'–0"	6'–0"	4'–8"	1'–11¼"	18"	11 ½"	10"	20"	55 ⅜"	9"	9"	16"

* DIMENSIONS VARY SLIGHTLY DEPENDING ON MANUFACTURER.

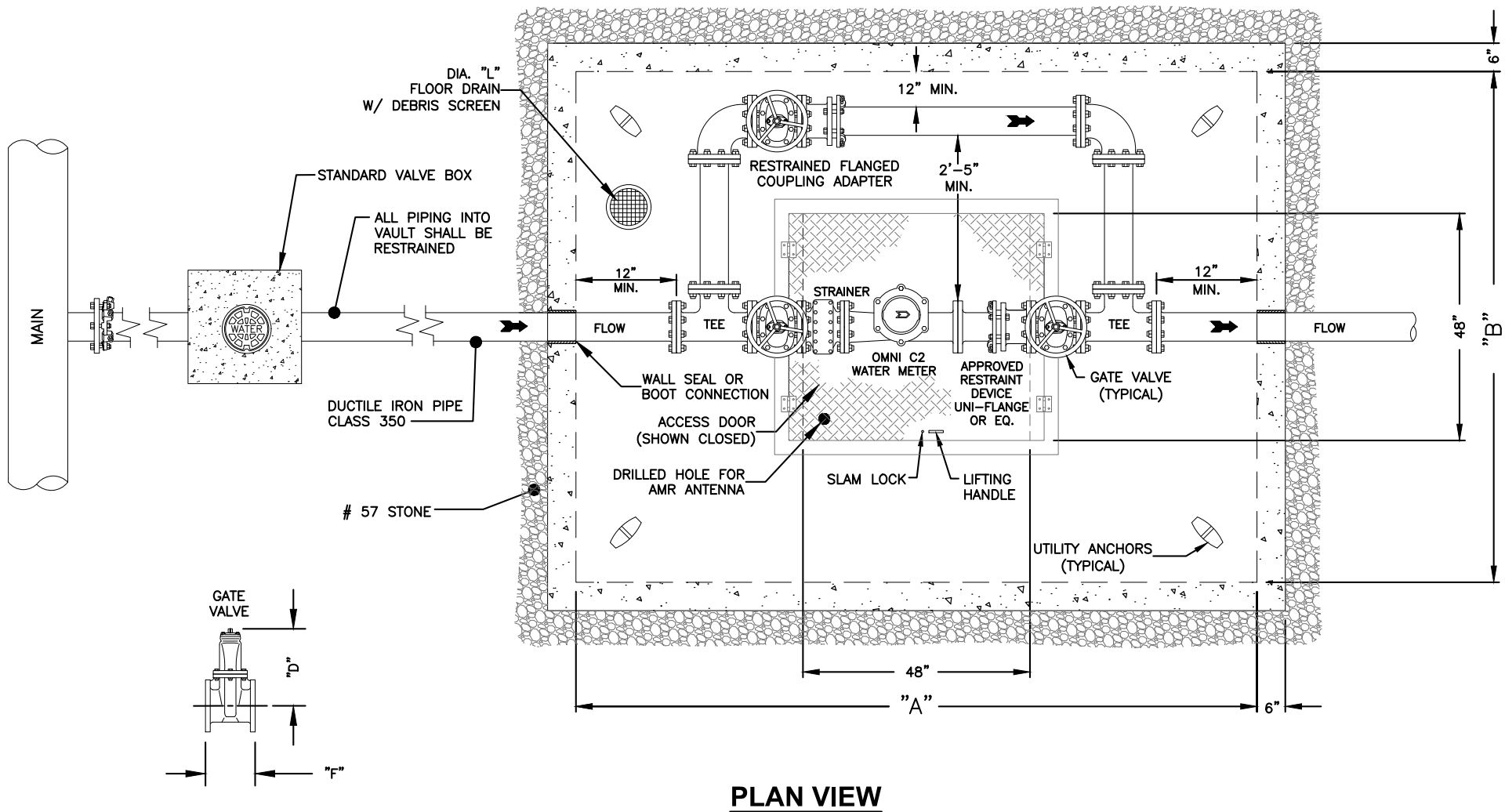

PLAN VIEW

NOT TO SCALE

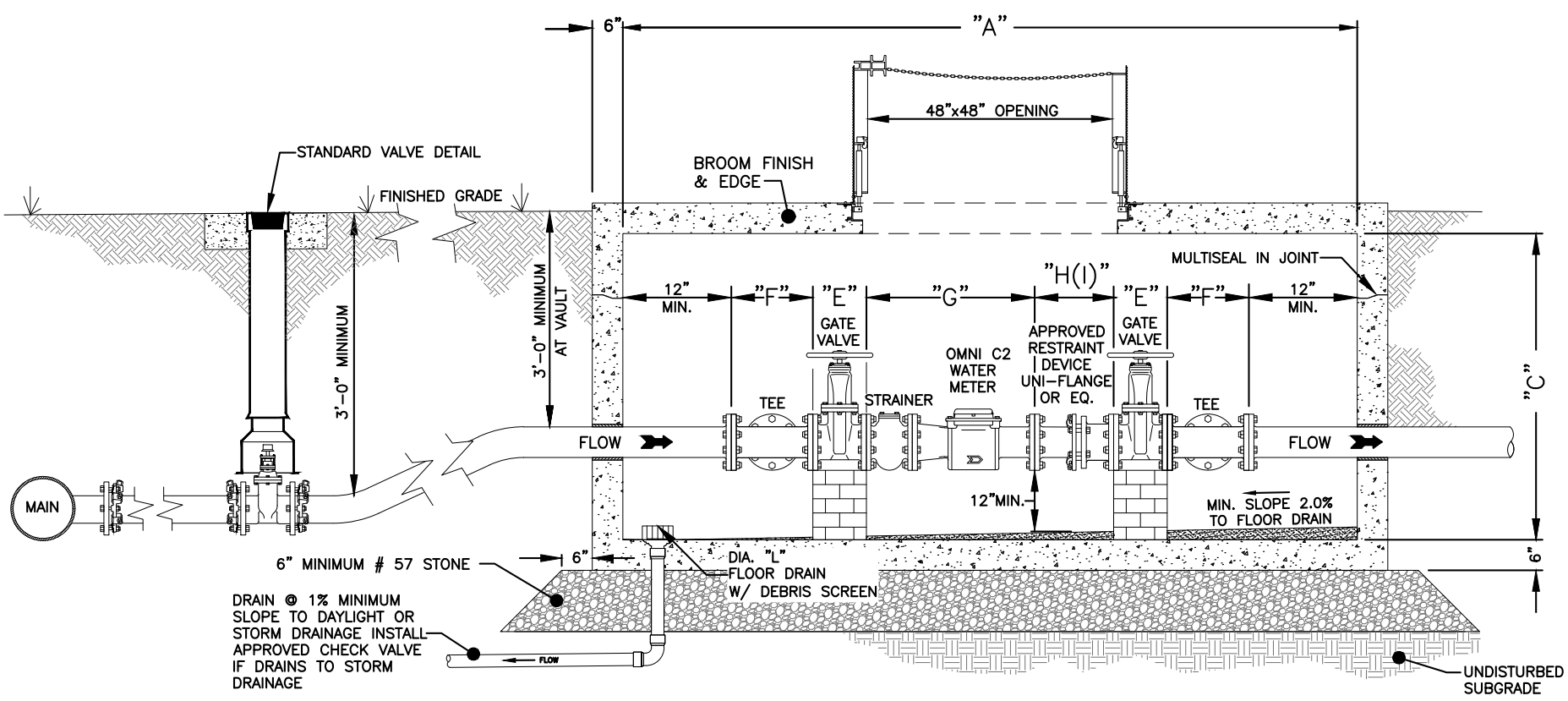

SECTION VIEW

NOT TO SCALE

NOTE:
VAULT DIMENSIONS WILL VARY SLIGHTLY DEPENDING ON MANUFACTURER

DATE: 01/12/2019 WD DWG. NO. 18

SCALE: NOT TO SCALE

City of Hendersonville Engineering Department
305 Williams Street
Hendersonville, NC 28792
(828) 697-3000 (office)
www.cityofhendersonville.org

8/2/2019 9:40:43 AM, mpomraning

4" THRU 8" METER & VAULT DETAIL