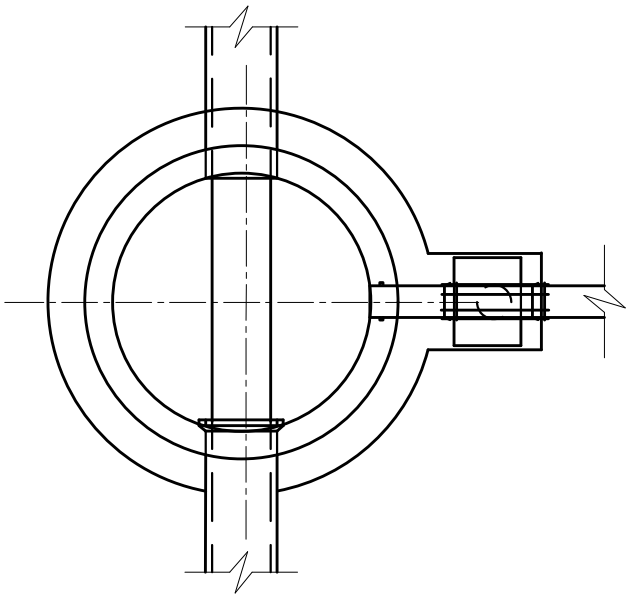

SEWER SIZE	DROP SIZE
8"	8"
10"	10"
12", 15", 18"	12"
21", 24"	15"
27", 30", 36"	18"

TABLE OF DIMENSIONS	
"P"	"S"
6"	16"
8"	17"
10"	19"
12"	20"

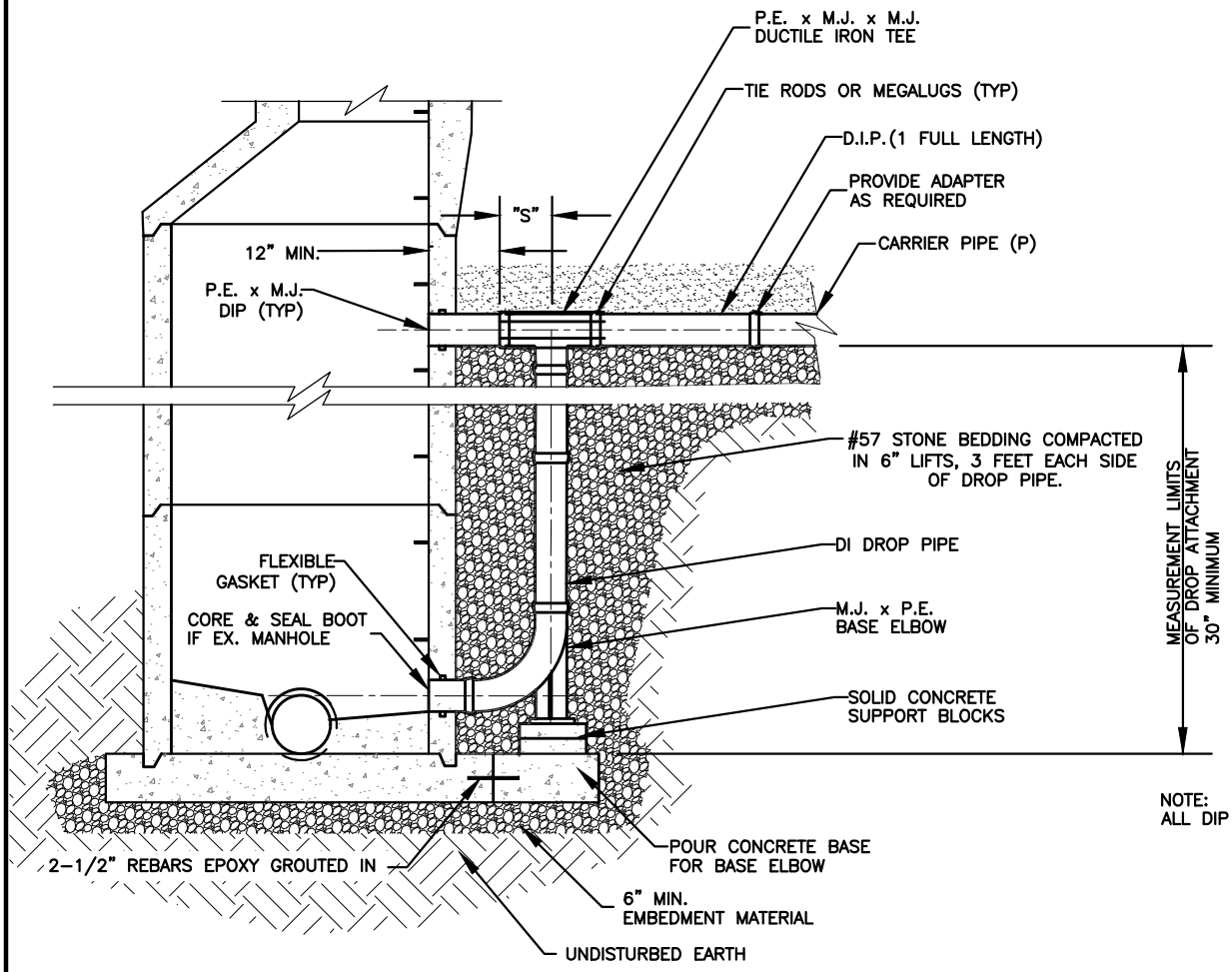

NOTE:
ALL DIP TO BE CLASS 350

DATE: 09/17/2019 SS-D DWG. NO. 9

SCALE: NOT TO SCALE

City of Hendersonville Engineering Department
305 Williams Street
Hendersonville, NC 28792
(828) 697-3000 (office)

www.cityofhendersonville.org

DROP MANHOLE